# Free Electricity Generator

Thank you for buying the plans! This product is the best thing that has ever happened to you!

This is where the fun begins as you can use magnetic energy as a source of electricity in your house. According to a recent statistic by an academic research, it has been shown that magnetic energy is a scalable form of an energy that can be transformed into a household electrical energy.

Please keep all of this information for yourself.

This device does produce free energy and can be used to power an entire home if made properly.

You can use this free energy not only for personal use, but for selling it to the big energy companies because it is your right.

The next page explains the principle of Generator in order to have a better look about what you are going to build and how this product works.

# How does the Generator function?

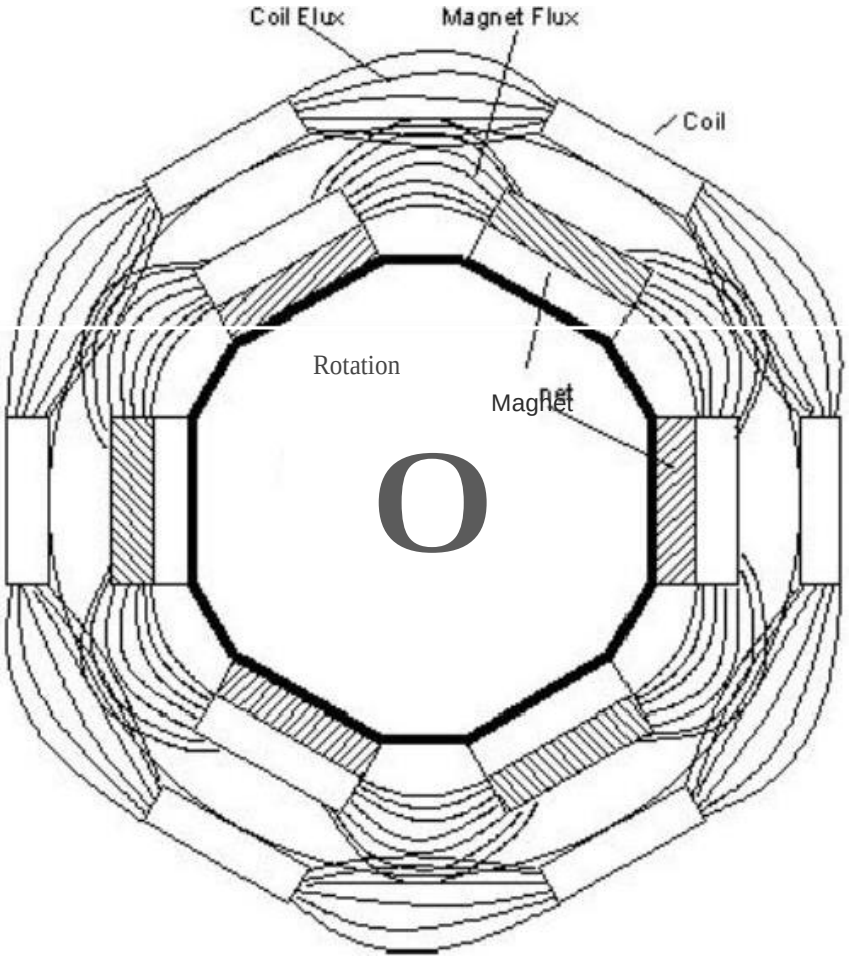


Theory of the Generator

This diagram shows the flux pattern at the point where the back EMF pulse would occur.The flux collapses (BACK EMF) at the position shown.The rotation shows that it is likely that it is the fields BETWEEN the coils and magnets that provide the torque.These fields are opposed and repel each other. Since rotation moves the rotor past the point where it would be normal the back drag of the force aids rotation rather than stopping the rotation.It is a metter of timing.The finite risetime of the back EMF pulse allows this. A critical speed must be exceeded from this work.This is the principle of how Generator works.It must also be powering a load to complete the circuit of the coils or there will not be the required back EMF flux.

EMF : electric magnetic force

**Figure 1.**

To build this product you only need to follow a few simple steps using several materials.

Next we will present the materials you will need and the steps you should follow to build the device:

1) Aluminum base plate, 18’’ outside diameter, ½’’ thick with 1 ½” inside diameter. The purpose of this extended base design is to balance out the structure which then equalizes the magnetic flow.

**Figure 1.**

2) Once you have your aluminum base plate, you will need a sleeve bearing about 1” long and have an inside diameter of 1”. It is very important that this is oil impregnated brass.

Figure 2.

3) 20" long by 1” diameter Brass Shaft. A piece of brass, 1" wide, 1" long, welded to the top end of the shaft is needed in order to properly build this device.

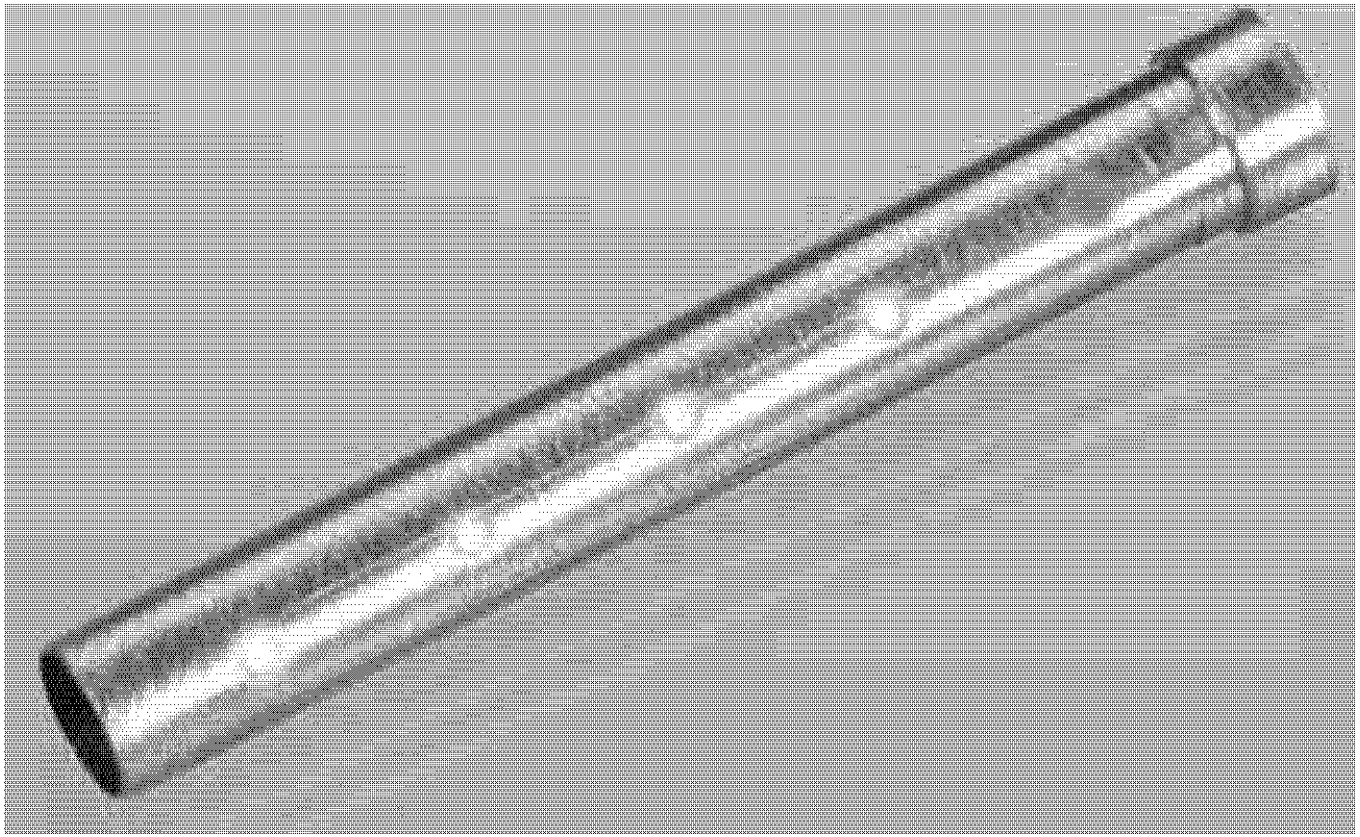

Figure 3.

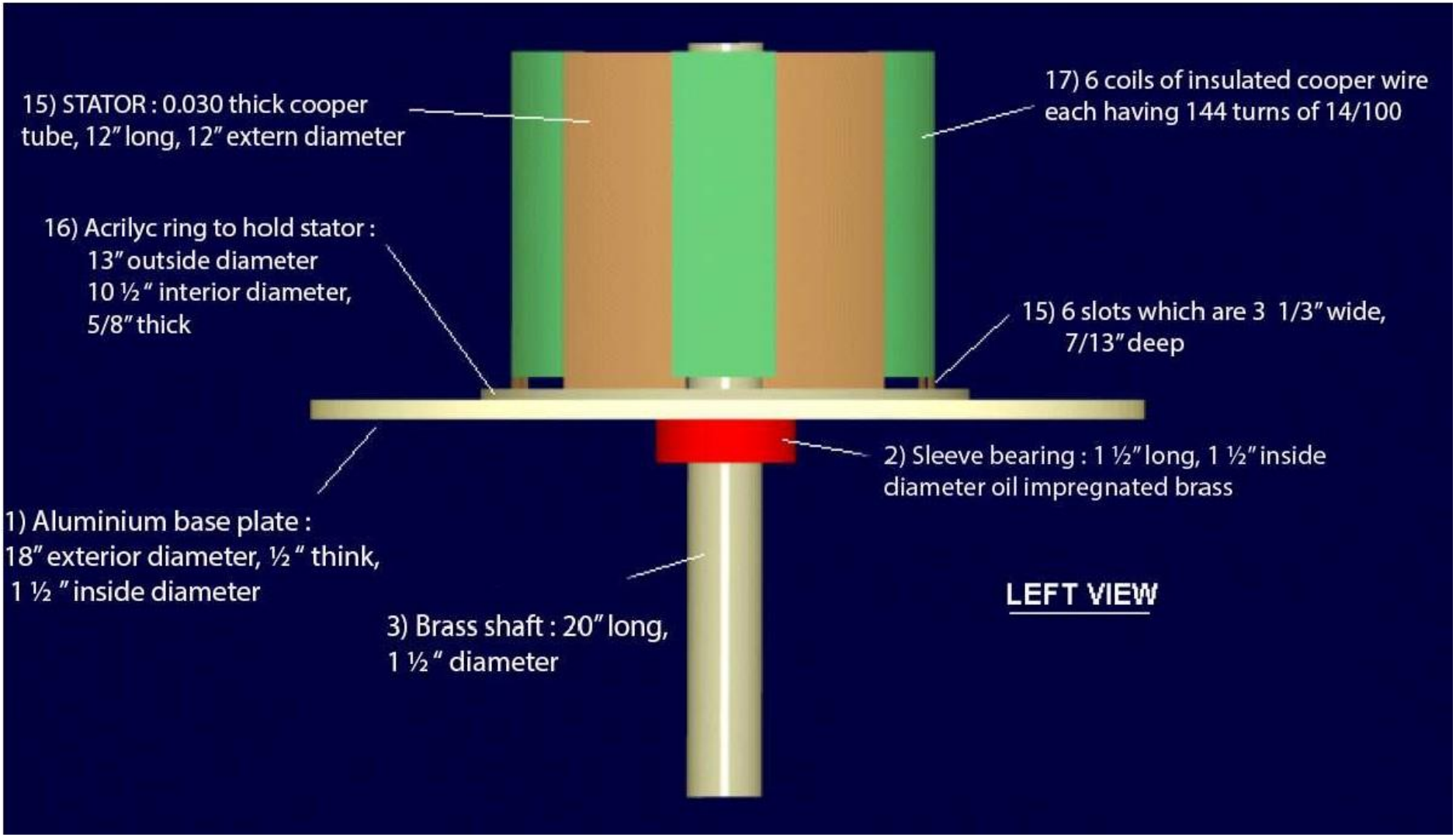


Figure 4.

4) Brass Rotor: 10" outside diameter, 1" inside diameter,12" long.

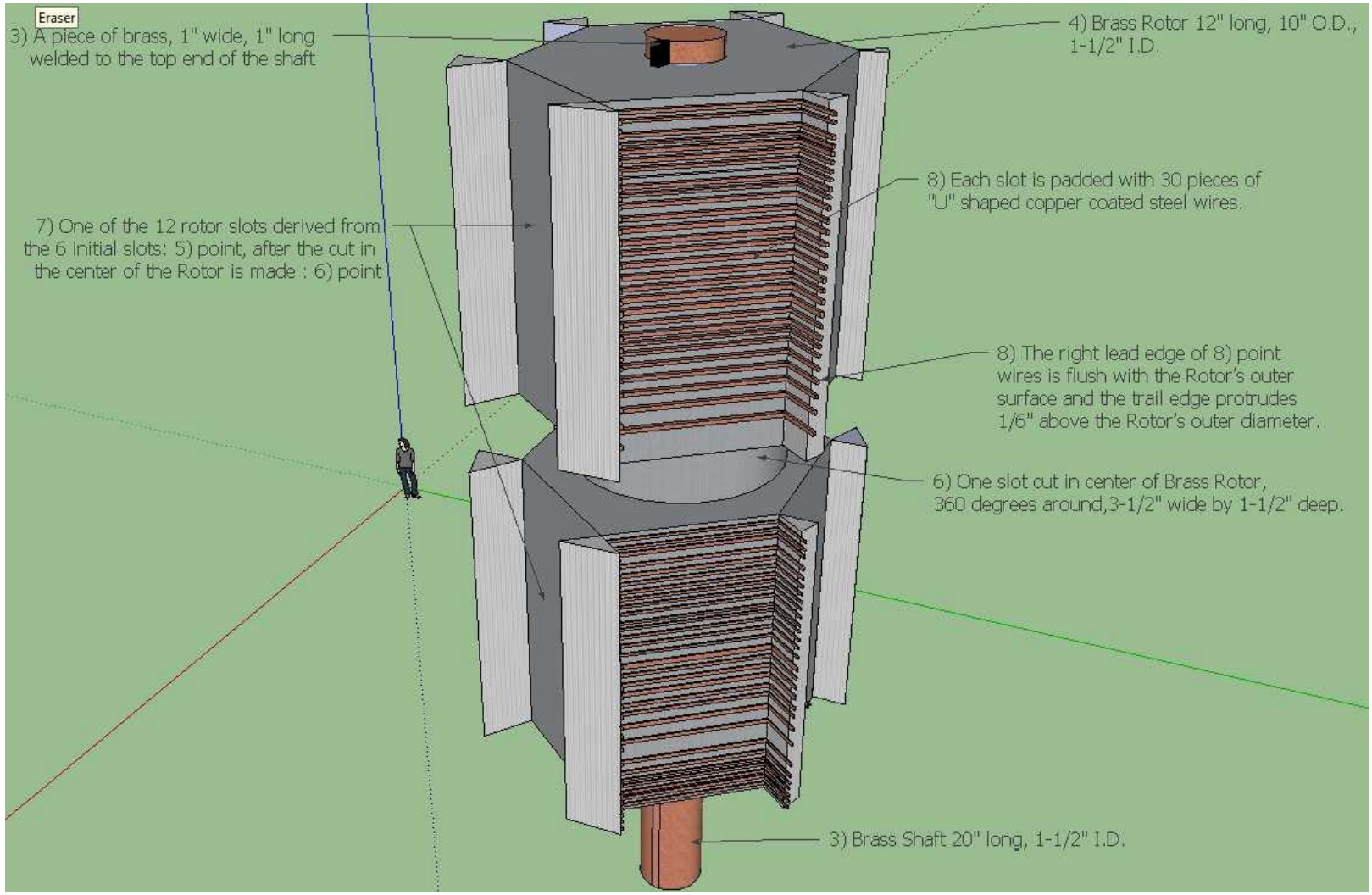
Eraser
3) A piece of brass, 1" wide, 1" long welded to the top end of the shaft
4) Brass Rotor 12" long, 10" O.D., 1-1/2" I.D.
8) Each slot is padded with 30 pieces of "U" shaped copper coated steel wires.
7) One of the 12 rotor slots derived from the 6 initial slots: 5) point, after the cut in the center of the Rotor is made : 6) point
8) The right lead edge of 8) point wires is flush with the Rotor's outer surface and the trail edge protrudes 1/6" above the Rotor's outer diameter.
6) One slot cut in center of Brass Rotor, 360 degrees around,3-1/2" wide by 1-1/2" deep.
3) Brass Shaft 20" long, 1-1/2" I.D.

Figure 5.

5) Fabrication of 6 rotor slots is then needed. These rotor slots should be 12” long and 1 ⅓” deep by 3 ½” wide. These slots are found to be based exactly 60 degrees apart from each other.
6) A separate slot cut into the centre of the brass Rotor. It is 360 degrees around, 2” wide and 1 ½” deep.
7) After this, the 12 slots are formed from the 6 slots when the 360 degrees cut is being made. The slots are lined with .010” thickness of mica for the sake of insulation.
8) Also, needed as part of the circuit, are 360 pieces of U-shaped wires which are .040” thick and copper coated steel. The 12 slots that are present will have 30 pieces of wires fitting into the Mica. Therefore, these wires are not allowed to come in contact with the Brass rotor. The tail edge of each U-shaped wire protrudes 1/6” above the diameter of the Rotor at both ends.

9) The next step is to make 11 turns with the .032” tick, steel wire, which is coated in copper. These turns will be placed around each of the 12 magnets. The 11 turns should be 3/8” wide. When you put them into firm snug fits, they will come in close contact as they are bent wires.

Figure 6.

10) After this, you will need 12 pieces of. 005” Mylar insulation which will be inserted into the core of the wires. These wires are the ones that are described earlier.

**Figure** 7

11) Now the 12 magnets, which are permanent, are going to be used. They should be well insulated with the Mylar. They should neither come in contact with the 11 turns that you have made, nor with the wires. The size of these magnets is 4” long with a width of 3 ¼”, 1/6” thick and are made specifically for its composition and for its strength (Alnico 4, M—60; 12 AL, 28 Ni, 5 Co, bal Fe, Isotropic permanent magnet material cooled in a magnetic field, Cast 9100 TS; 450 Brin, 2.2 Peak energy product should be used as well).

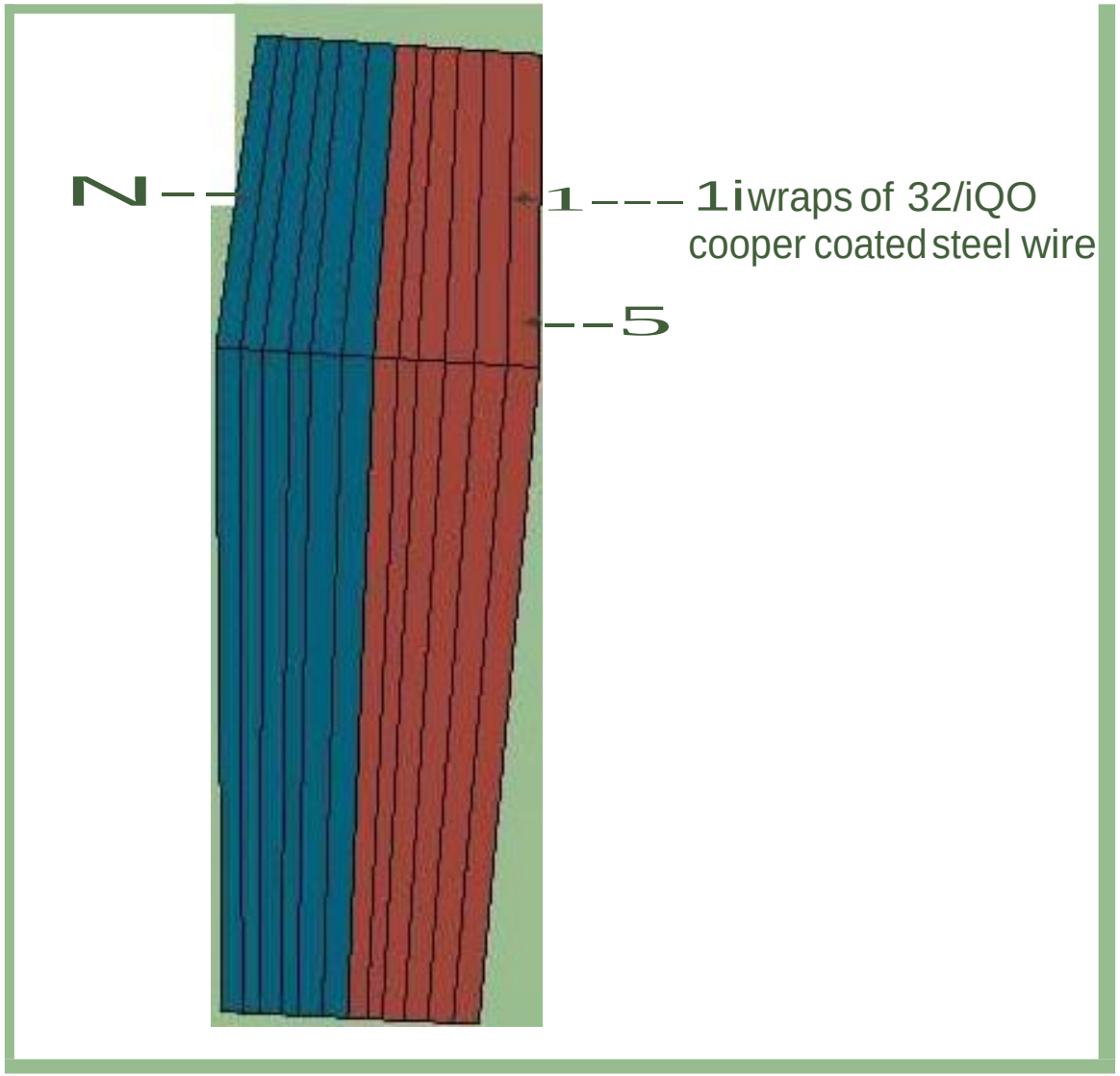
N--
1--- 1i wraps of 32/iQO
cooper coated steel wire
--5

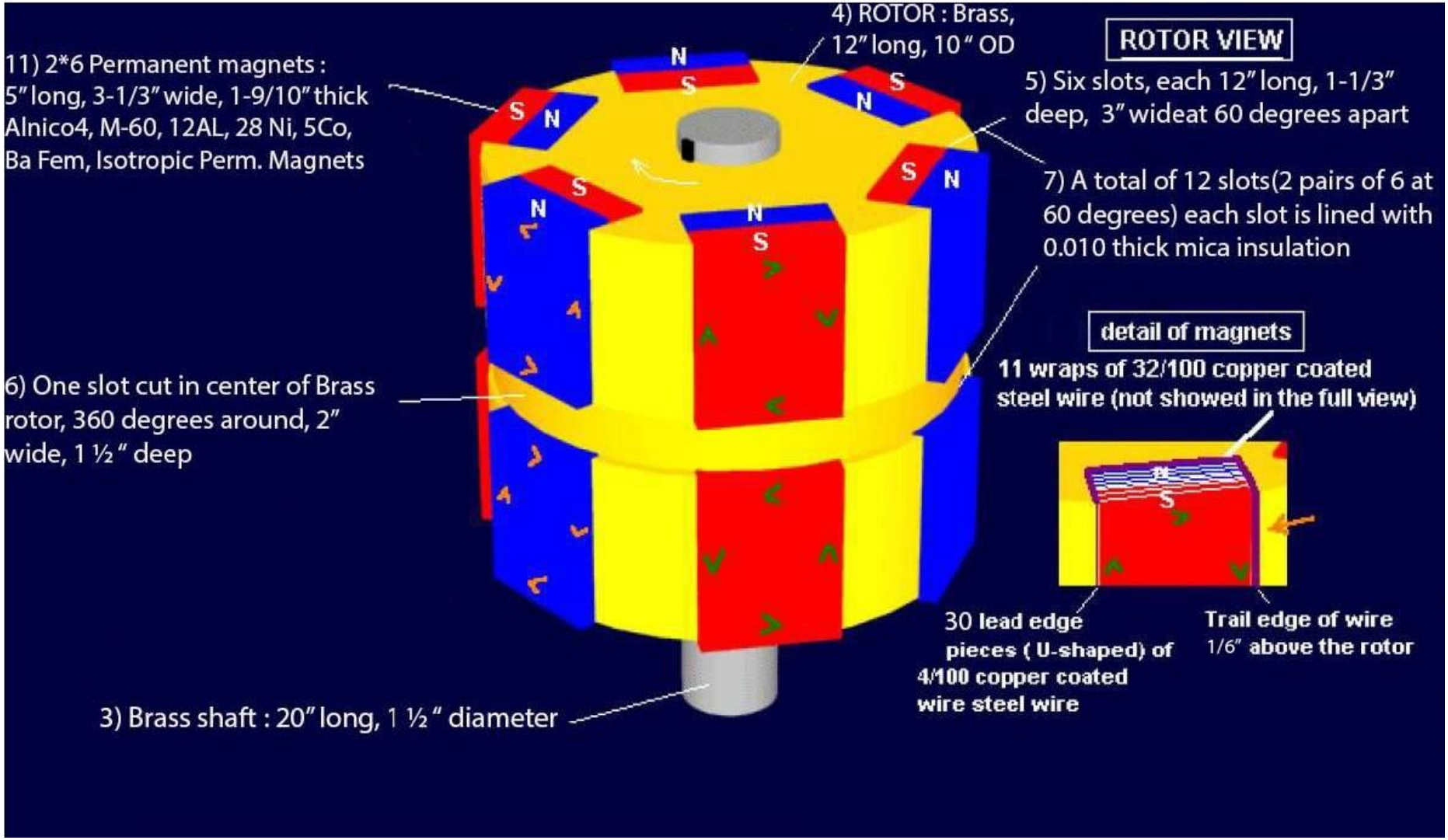
4) ROTOR : Brass, 12" long, 10" OD
ROTOR VIEW
11) 2*6 Permanent magnets : 5" long, 3-1/3" wide, 1-9/10" thick Alnico4, M-60, 12AL, 28 Ni, 5Co, Ba Fem, Isotropic Perm. Magnets
5) Six slots, each 12" long, 1-1/3" deep, 3" wideat 60 degrees apart
7) A total of 12 slots(2 pairs of 6 at 60 degrees) each slot is lined with 0.010 thick mica insulation
detail of magnets
11 wraps of 32/100 copper coated steel wire (not showed in the full view)
6) One slot cut in center of Brass rotor, 360 degrees around, 2" wide, 1 ½" deep
30 lead edge pieces ( U-shaped) of 4/100 copper coated wire steel wire
Trail edge of wire 1/6" above the rotor
3) Brass shaft : 20" long, 1 ½" diameter

Figure 9.

12) When inserting these magnets into the rotor, the outer faces of the magnets are not to be machined to a radius. The distance between the core of each magnet and the center of the coils wound on the copper tube (which is explained later on) is a 3/8”. Each coil on the copper tube passes at 1/8’’ from the edge of each U-shaped wire. This ‘changing magnet spacing’ aid is not only the release cycle; it is also contributing to the rotational movement. You should take note that the sharp magnet edges, which are found to be facing the coils, should be sanded into a small smoothened radius.

13) The 12 wires that are wrapping are segmented into 2 parts of upper six and lower six. The upper 6 magnets are connected in series, as well as the bottom ones. These two parts are not connected in any manner. The flow of magnetic energy is from the upper 6 part to the lower part is got by “flow direction” which you can see in the Figure 14.

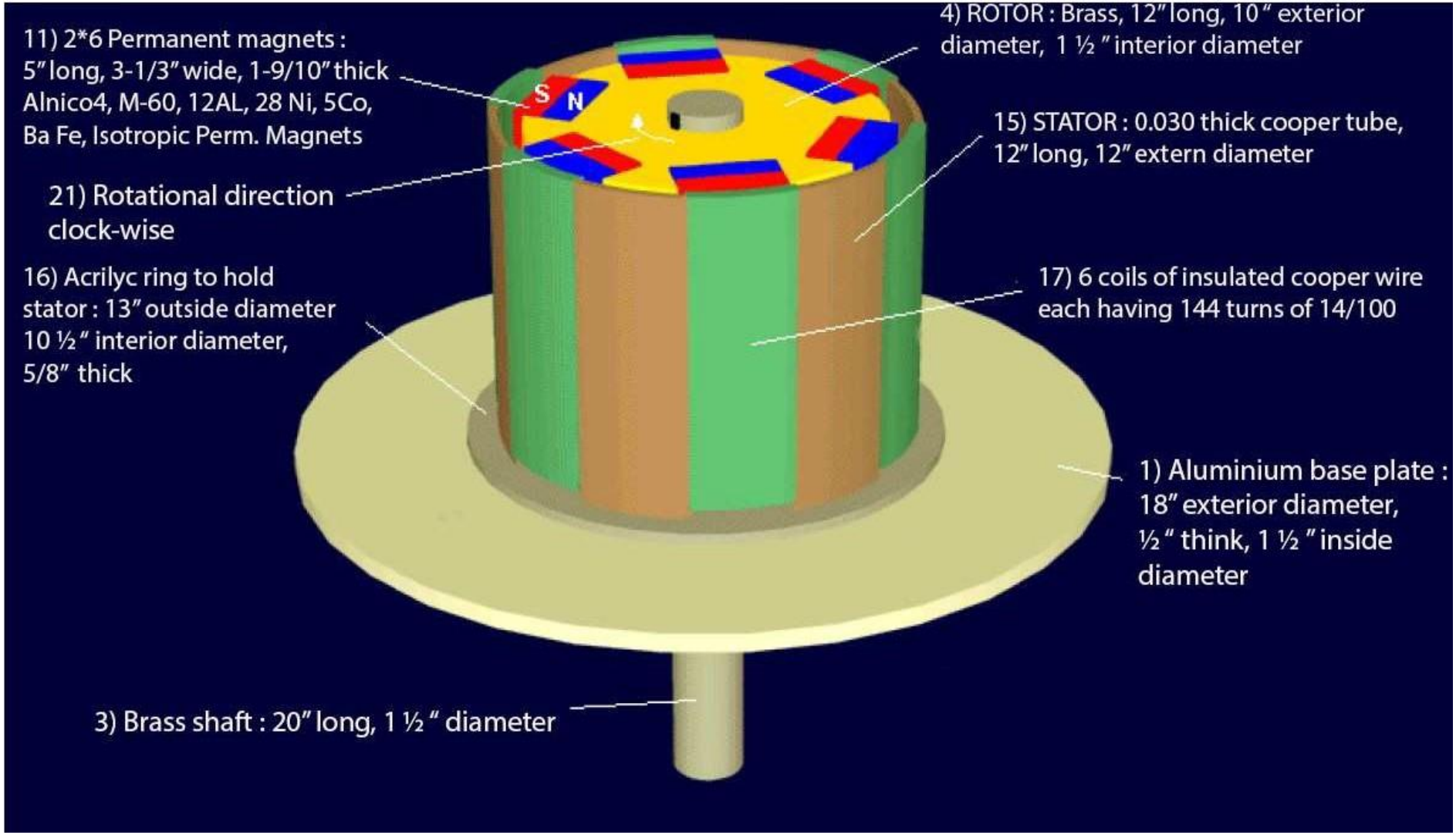
11) 2*6 Permanent magnets :
5" long, 3-1/3" wide, 1-9/10" thick
Alnico4, M-60, 12AL, 28 Ni, 5Co,
Ba Fe, Isotropic Perm. Magnets
S
N
4) ROTOR : Brass, 12" long, 10" exterior
diameter, 1 ½ " interior diameter
15) STATOR : 0.030 thick cooper tube,
12" long, 12" extern diameter
21) Rotational direction
clock-wise
16) Acrilyc ring to hold
stator : 13" outside diameter
10 ½ " interior diameter,
5/8" thick
17) 6 coils of insulated cooper wire
each having 144 turns of 14/100
1) Aluminium base plate :
18" exterior diameter,
½ " think, 1 ½ " inside
diameter
3) Brass shaft : 20" long, 1 ½ " diameter

Figure 10.

14) In the Figure 9 you will see the wires being wrapped around the magnet right from the top half (north) and after wrapping around the magnet 11 times, you will see that it is connected to the lower half (south). This wire then goes into the second magnet and is connected to another wire which is the attract wire which is its north side. Following these steps all the magnets will be attached from north to south or from south to north. The actual connections should not be soldered with the insulation and instead should be crimped copper clips that stop the contact to the Rotor body.

The magnets that are used are fixed by the wires and are wrapped tight and comfortably around them. This might not be the best way to do the experiment. However, it sure keeps the magnet in one place.

15) You'll next need a copper tube. It is 0.3" thick, 12" long and has a diameter of 12" on the inside diameter. Six slots are then cut at the top of this tube. These slots are found to have a width of 3 ⅓" and 3/34" deep, spaced at 60 degrees from each other. You can then repeat the same process over again at the bottom. These slots are found to have a width of 3 ⅓" and 7/13" deep. However, these slots have to be aligned with the upper ones and both of them should correspond to each magnet. In Figure 10 will see 6 mounting points (Figure 11).

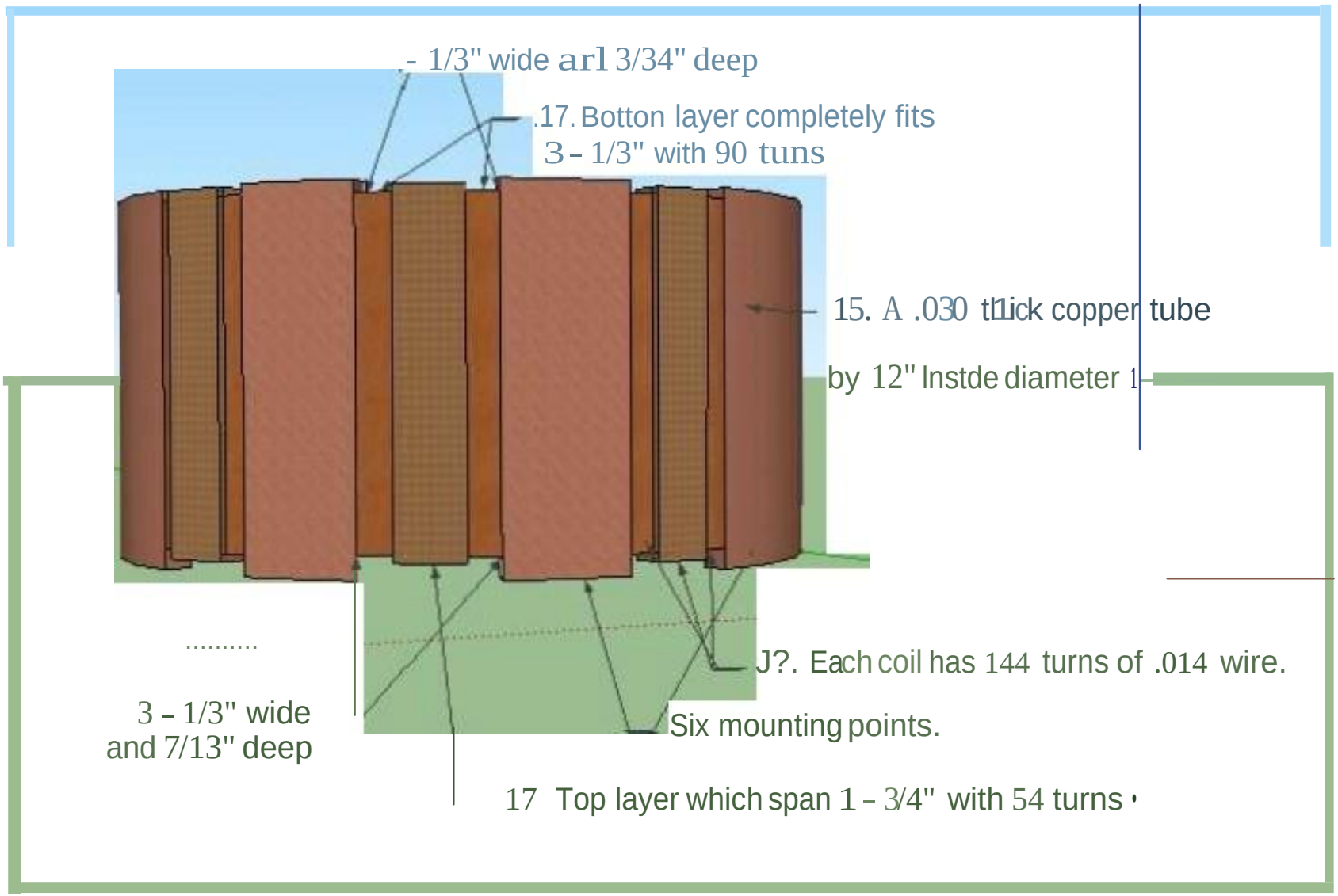
- 1/3" wide arl 3/34" deep
.17. Botton layer completely fits
3 - 1/3" with 90 tuns
15. A .030 tl1ick copper tube
by 12" Instde diameter 1
J?. Each coil has 144 turns of .014 wire.
3 - 1/3" wide
and 7/13" deep
Six mounting points.
17 Top layer which span 1 - 3/4" with 54 turns

Figure 11.

You are almost there, in a few time, the generator will be up and running!

16) Then make an acrylic ring to hold the copper tube in place. The acrylic ring dimensions are 14” outside diameter, 10 ½” inside diameter, 5/8” thick. It should be bolted on to the aluminum plate directly. This ring should have a groove which is .040 wide. The grove is cut to about 3/7”deep so it could allow the six copper tube mounting points to be inserted (Figure 12).

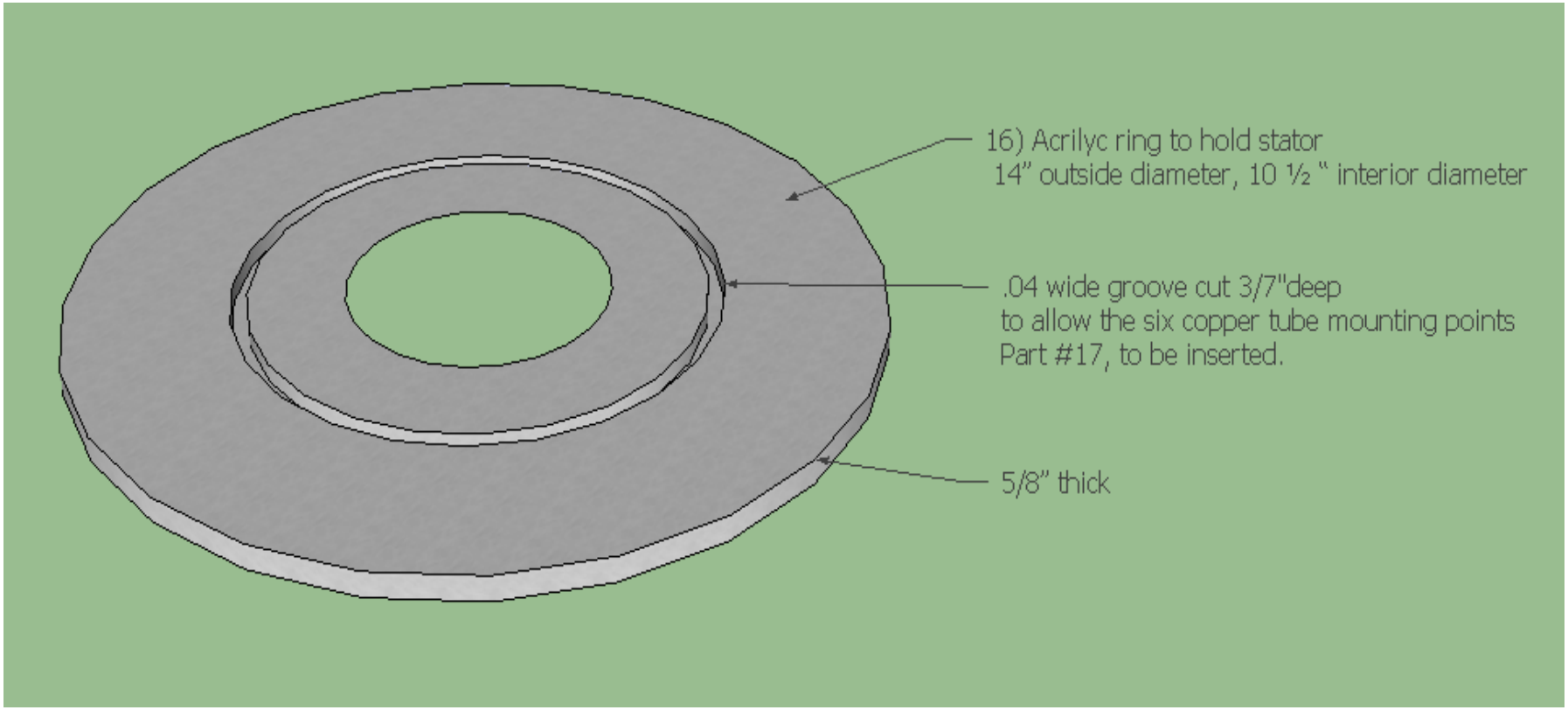
16) Acrilyc ring to hold stator
14" outside diameter, 10 ½ " interior diameter
.04 wide groove cut 3/7"deep
to allow the six copper tube mounting points
Part #17, to be inserted.
5/8" thick

Figure 12.

After you have done this, place a .002” thick plastic insulation paper around the inside as well as the outside of the copper tube.

Figure 13.

17) After this you should fabricate six coils of insulated copper wire with each coil having 144 turns of .014 thick wires. Each coil is wound into two layers. The bottom layer is completely fills the 3⅓” wide slot with 90 turns and the top layer is span 5/16” wide with 54 turns on top of the bottom layer.

Just to be sure that each coil has the exact wire length or if it has 144 turns, a sample length of wire is wrapped. Then the wire is unwound to act as a measurement template for six lengths. To wind a coil, you are supposed to fill a small spool with one length then by holding the copper tube at the lower extension, start at the plus wire and temporarily secure this wire to the outer surface of the tube. This is a recommended way. The next thing to do will be to place the spool of wire, which has already been measured, inside the tube. Wrap it down and around the outer side. Make sure you advance it clockwise until the 5/8” slot is full with 90 turns. Return this wire back and across the top region of the coil for 15/32” and then wind it in the same direction again. Advance it clock—wise and place the second layer making sure it spans for 5/16” with 54 turns. This is a method, which should have the second layer perfectly centered on top of the first layer. After you are done winding this coil, repeat this process for each of the 6 slots (Figure 114). Fill the small spool with another length of premeasured wire by the act repeating. This is very important as at this point a very important magnetic response happens as all six coils get their second layers spaced as disclosed.

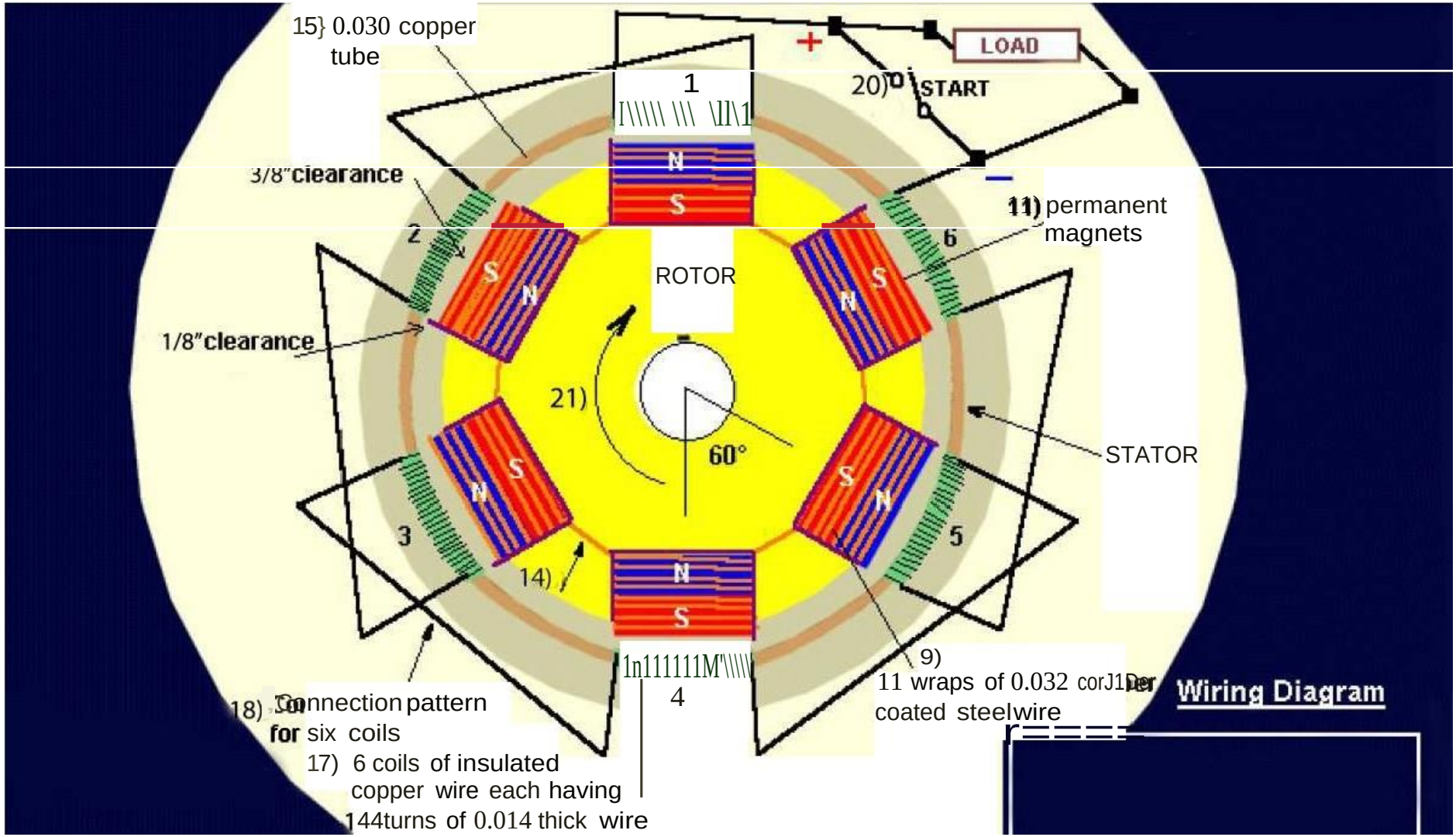
15} 0.030 copper tube
LOAD
+
20)
START
1
3/8"clearance
N
S
11) permanent magnets
2
6
ROTOR
1/8"clearance
21)
60°
STATOR
3
5
14)
9)
11 wraps of 0.032 corJ1Der coated steelwire
4
18) Connection pattern for six coils
17) 6 coils of insulated copper wire each having 144turns of 0.014 thick wire
Wiring Diagram

Figure 14.

18) Connection pattern for six coils. When the unit is driven at start—up (hand crank) for 42 seconds at 2100 RPM, all six jumper wires must be together which means the plus wire goes to the minus wire connected by the start switch. After 42 seconds the load is added to the circuit and the start switch is opened. To double check your connections between the coils, note that the finish wire of coil #1 goes to the finish wire of coil #2, which is top layer to top layer. This pattern then has start of coil 2 (bottom layer) going to start of coil 3 (also bottom layer). When the copper tube with the coils is placed around the rotor, the distance from any magnet to any coil must be identical. If it measures different, acrylic holding shapes can be bolted to the aluminum base, protruding upward, and thus push the copper tube in the direction needed to maintain the spacing as stated.

19) Wires to load as shown in Figure 14.

The “Load” can be whatever device you want to power. I illustrate an example for powering a serial connection of Light Bulbs. You can power as many light bulbs as you want provided that they are in a serial connection.

Figure 15.

Connect each bulb in series and follow the wire connection from Figure 14 in order to have the right setup for the “Load” connected to the generator.

20) Wires to start switch as shown in Figure 14. The generator will not run by itself if the switch is not opened. Therefore, you must open the switch to make sure it starts working.

21) Rotational direction which is clock—wise when viewing from top down as shown in Figure 14.

22) Acrylic dome for protection against elements as shown in Figure 17. It protects from weather but keeps the air space contained so that it can be magnetically charged. As the unit begins to spin, the waves of magnetic energy can be felt inches away from the stator. This acrylic dome must be bolted directly to the aluminum base plate.

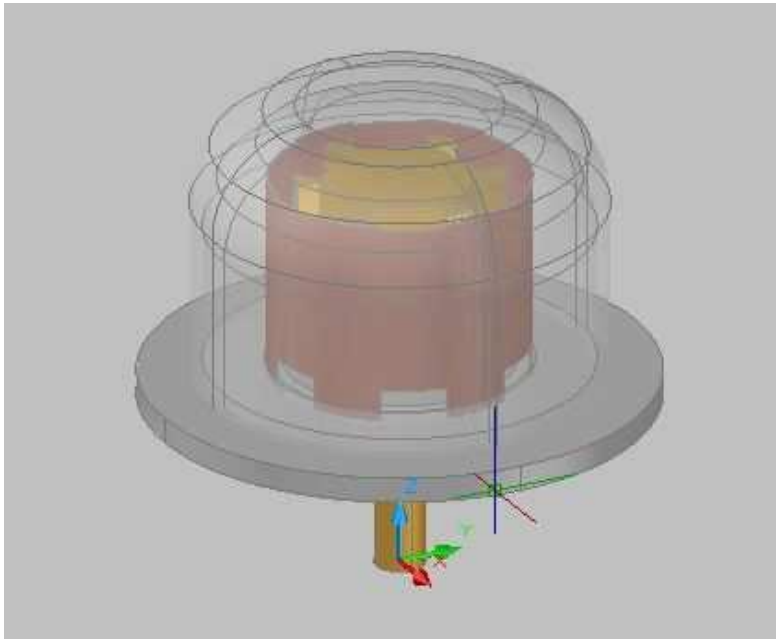

Figure 17.

23) Coating of clear acrylic to solidify rotor. Do not use standard motor varnish. Pre-heat the rotor and then dip it into heated liquid acrylic. After removal from dip tank, hand rotate until the acrylic hardens, then balance the rotor. For balancing procedure, either add brass weights or remove brass as needed by drilling small holes into the rotor on its heavy side.

24) We need insulation tubing on all connections.

25) Shaft for start purposes and speed working.

The generator cannot run in a horizontal position. Therefore, it is strongly recommended not to try it.

Now the Generator is up and running and you can use it to make your own electricity and power your house. The next electricity bill will be one of your biggest surprises; the electric companies' suppression is gone and will never come back!