The Magnet Generator

Free energy at your fingertips!

If you decide to build this device, only use it for your own benefit and keep it from friends and especially the media. A lot of thought and passion has been invested in this generator and the result is a unique device that can produce free energy from a few magnets.

Please keep all this information to yourself. The current US pattern law does not allow much information to be disseminated, but as soon as it is available, you will be informed.

INTRODUCTION

Even though magnetic generators are a very interesting subject, just one out of the many magnetic power generator facts seems to have particular importance for the majority of individuals. What makes people eager to find out more about magnetic generators is the possibility to get free electricity from magnetic energy. This is why a magnetic power generation system is also known as “free energy generator”. This generator can fully and freely power your home because it runs by itself without cease, generating costless energy. Such a generator makes use of the magnetic force in order to create perpetual motion.

Whether this is the first time you have been offered information about magnetic power generators or not, you may be a little confused about what they are and how they work. You have definitely heard about solar power and wind power. It has been a while now since research on these fields has gained momentum, the use of solar power and wind power continuing to increase. However, even if these two are viable sources of renewable power, they have a major drawback – their electricity production is limited by weather conditions. This is why magnetic energy generators have been

designed. Unlike other sources of renewable energy, magnetic power generators stand out through their energy production.

Understanding the magnetic power generator principles is not complicated. You definitely know what a magnet is and you most likely have at least one of these in your home, probably placed on your refrigerator. You also know that when pushing the polar opposite sides of two magnets together you feel a great force, as the magnets repel each other. You cannot deny that this force is real and that you can actually feel the two magnets pushing against one another.

This simple experiment with two magnets is the easiest way to understand the basics of a magnetic power generator. A magnetic power generator is like a mini turbine assembled by aligning several magnets so that they will all be pushing against each other. Also, the magnets should be set up so that they will spin a small wheel, which will keep spinning due to the perpetual motion principles. Perpetual means never ending, never changing or occurring repeatedly; it is enough to get the generator spinning and the opposing forces of the magnets will provide it with energy continuously, so that it will keep spinning forever.

About all electricity generation systems today use turbines, with differences appearing regarding the power source that is used to spin the turbines. In case of atomic, diesel and fossil fuel generators, the turbines are rotated by the use of thermal energy in the form of steam; the power of water is used by hydro electrical power stations to move the turbines, while, as we have seen, in the case of magnetic power generators, magnets are used to spin the turbines.

The first advantage of using magnets instead of other power sources is that the magnetic power generator is not reliant on sunlight or the blowing wind in order to produce electrical energy. The perpetual magnet motor has the ability to operate continually. The second advantage, which for many is the top advantage, is that, by using a perpetual magnet motor to generate electrical energy, you are environmentally friendly, because no harmful by-products such as atomic waste or greenhouse gas by-products are involved in the process and natural resources are preserved. In this respect, magnet power is similar to solar power and wind power.

However, when talking about magnetic power generator principles, one question remains. Some people argue that the continuous magnet generator has a problem: it only delivers a small amount of energy, so it is not enough to power your home. That is absolutely not true! Once you have built The Magnet Generator and it started to work for you day and night, producing energy, you will then have enough energy to power your home and appliances. Perpetual motion actually creates more energy than it uses.

All these magnetic power generator truths point out that, without doubt, The Magnet Generator is the most reliable energy source for the modern world. Apart of the many benefits listed above this device has other significant pluses. Some of the top benefits of the magnetic power generator include the following facts: the generator is easy to build and use, it is cheap to build, it will last forever and it is even cheaper to run, it will help you cut down on your electric bills dramatically, it is completely safe and reliable.

So, there is no reason for you not to start building your own Magnet Generator and actually see it working. Your generator will run by itself so there will not be need of any third party machine or resource to keep it functioning; it will actually produce 100% free energy endlessly. The Magnet Generator is compact in size, so it will be very easy for you to use it at home, no matter where you live. In addition, you do not need to have any worries because both you and your children will be able to walk in close vicinity of the device without any risks since the generator is not dangerous or uncontrollable, and it does not produce harmful by-products or gases.

That being said, here are the parts and steps to building the device that opens up the free energy world for you:

1. End caps

The end caps are aluminum plates. You will need 2 such plates and you will position them at each end of the generator. The flange bearings are fixed to the end caps as well as to the protective case with stator mounting bolts. The flange bearings are fixed at the 4 bolts that are visible in the picture. You will be presented with a radius but it can be changed, depending on the flange bearing you will use. The 6 outer bolts presented in the picture if for the 6 bolts that will support the stator. You can build these plates from aluminum by drawing the dimension on a square sheet of aluminum. You can use a handsaw or jig saw. The overall shape of the end caps is not crucial because none of the two will rotate. However, a large difference between them the outer casing will not fit:

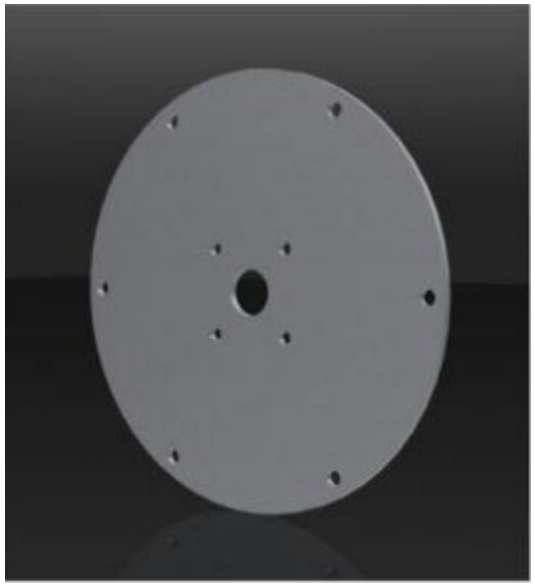

2. Rotors

Each of the two rotors will be a thin steel plate (1/8 inch thick and 12 inches in diameter). As shown in the picture, a radial pattern on magnets will be placed on each rotor. The rotor is then placed into a mold and Devcon Flexane-80 liquid will be poured on top of the rotor until the magnets will barely be seen. The Flexane-80 liquid urethane resin must be of medium consistency. This will allow the plates to expand or contract, depending on the weather condition:

The above picture shows the rotor before the Flexane-80 liquid is added. The 4 bolts circling the centre of the rotor plate are used to fix the plates to the flange (which will be attached to the driveshaft).

You can use the same dimension for the steel plate (1/8 inch thick).

You can use any type of magnet (the stronger, the better). We recommend using 45 neodymium-boron rare earth magnets. You will need 12 for each rotor resulting in a total of 24. You must arrange the magnets at 3.5 inches from the center of the plate. The dimensions of the magnets are 2” x 1” x 1/2” (L x W x T). Their thickness will provide the magnetic force.

As you position the magnets make sure you alternate the poles. This means that they must alternate N, S, N, etc. as they go around. In order to properly arrange the magnets, a wooden jig will be used (it will later be presented). The jig will be placed using 4 pins that will go through the 4 bolt holes presented in the picture. Then simply arrange the magnets and remove the jig.

Here is a picture of the pattern of the magnets, as they should be placed:

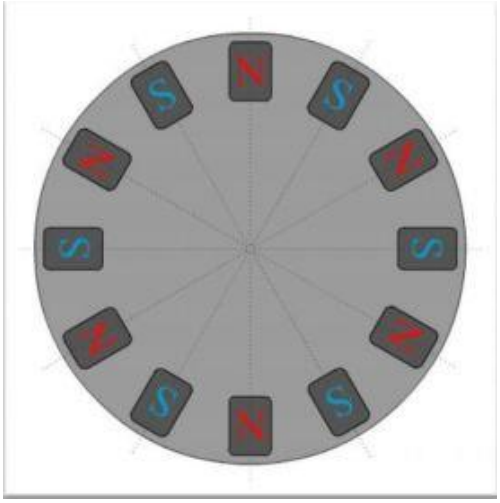

The jig will simplify the placing process and it can be used for both rotor plates. You need to create the rotor plates opposite of one another and take special care in arranging the magnets. First, select a starting point on the wooden jig for the first magnet and continue with the second one, placing it with the opposite pole. Continue by alternating the poles of the magnets until the circle is complete. The second rotor plate must be built in the same manner, except from the fact that the first magnet must be placed on the opposite pole as to the first magnet on the first plate. This will result in a complete opposite placement of the magnets (from the first rotor plate) - opposite poles all face one another, enhancing the magnetic flux.

Safety advice: Because the magnets are powerful, take care when handling them around the garage. Also take care when placing the magnets of the rotor plates because they can crack/shatter and decay their magnetic potential over time.

Next we will present the parts needed for casting the rotors. (a full plan with dimensions is included at the end of the PDF file)

3. Magnet jig and mold hardware

The wooden jig is a round piece of wood with slots cut into to facilitate the placement of the magnets. The inner 4 bold circle has a 1.375" radius - the same as the rotor plates. Because 12 magnets are used, you need to cut 12 slots into the jig at a 30 degree angle around the circumference. This way you can fix the jig with the bolts to the rotor plate and fit the magnets into the slots. Gently remove the jig after fitting all magnets.

The overall diameter of the jig is not relevant, but the distance from the centre of the jig to the inner edge of the slots is crucial because the magnets must be placed equally from the center of the plate:

The next picture presents a second suggestion for the jig. This second idea provides an easier removal of the jig after the magnets are placed:

4. **The bolt circle** around the outside of the rotor mold base is used to bolt the entire mold together. The inner bolt circle will hold pins that will act as "dummy bolts" for the casting process and keep bushings in perfect alignment. A plug goes in the center hole which will allow the cast to mount to the flange. This part has a stepped thickness that corresponds with the top half that allows the two parts to lock together. This will prevent flexane from leaking out of the mold and keep the metal plate centered. This part is cut from MDF and stepped using a rotary table but can be left flat if the right equipment isn't present:

The top part of the mold can be cut from MDF. It has the same bolt circles, at the same distance as the one on the bottom. This second piece is a little thicker in order to lock to the one on the bottom. It is not necessary for it to be thicker. If not possible, you can make this part flat. It is important to have the same dimensions as the one on the bottom:

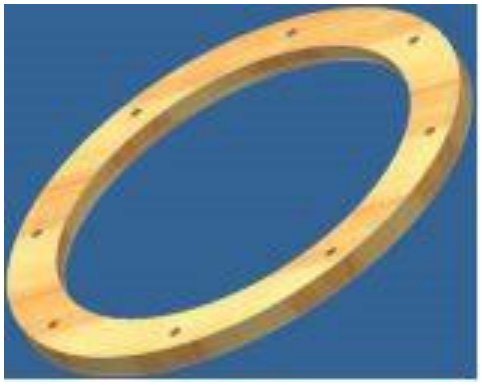

The material for these pins is not relevant. They must fit the bushings and they need to be placed and removed easily from them:

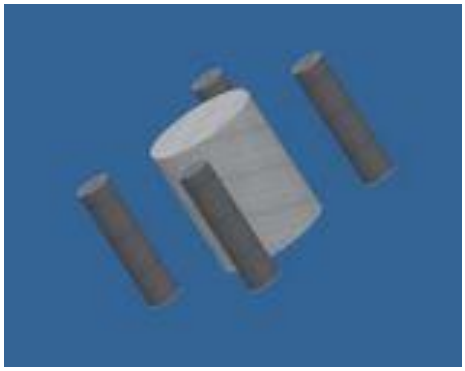

The bushings you need must slide over the pins during the casting process and have knurls to be properly bonded with the Flexane-80. You must use steel bushing to avoid corrosion:

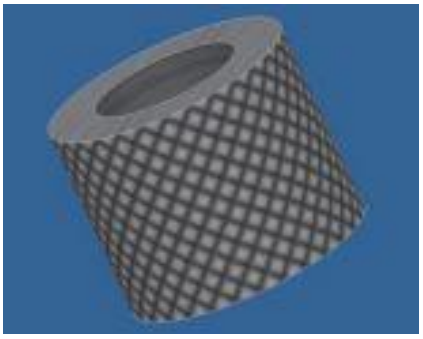

5. Mold assembly

We will present in the next section the steps to build the rotor mold.

The surface of the rotor plates must be roughened using sand paper.

A. First, place the steel rotor plate on the base of the mold and insert all 4 pins and the centre plug through the holes until you have a plane surface on the bottom.

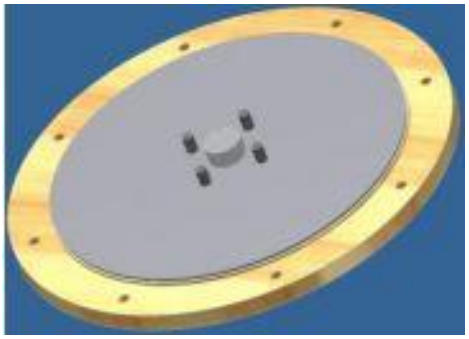

B. Next, place the wooden jig onto the rotor plate and fix it using the pins.

C. Start placing the magnets by alternating the poles. Before placing the magnets make sure to set the first magnet as the top one and remember its pole because you will need the second rotor plate to start with the opposite pole.

Place the magnets into the jig's slots by alternating the poles. You can check the polarity by hovering another magnet around the plate and checking the attraction and repulsion.

BE CAREFUL NOT TO LET THE MAGNET SLIP FROM YOUR HAND! This could damage the magnets in the jig and ruin the rotor.

D. Next, remove the wooden jig and place the knurled bushing onto the pins. Place the top of the mold and fix it using screws. You are now ready to pour the Flexane-80 liquid.

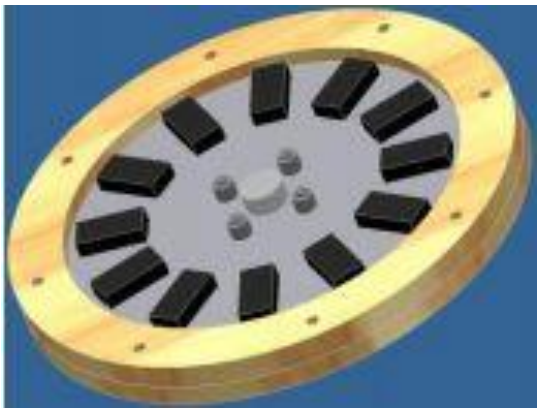

6. Casting - preparation of the mold:

MATERIALS:

- 2 brushes with wood handles
- 2 Plastic mixing buckets
- Johnson paste wax (or similar) and rags
- Liquid silicon mold release
- Hot air gun
- Flexane 80 Liquid Resin
- Devcon FL-10 Primer
- Finished metal plates
- Magnet Jig
- Metal Bushings
- Metal Pins

7. Preparing the mold and the surfaces

A. After preparing the MDF mold, apply Johnson paste wax on any area that the Flexane will come in contact with. Repeat this process after 10 minutes .

B. Put the mold together and rub more of the Johnson paste wax all around the mold, especially at the jointure of the two pieces of MDF. This will prevent the Flexane from leaking. Leave it for 10 minutes to dry.

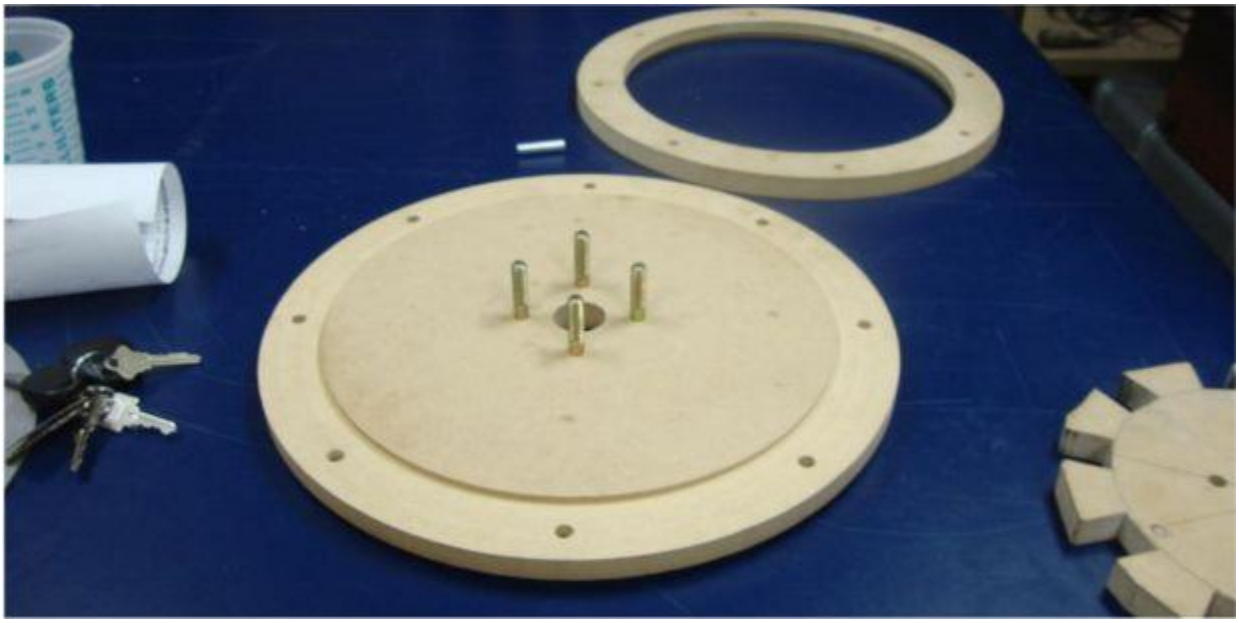

C. Spread the liquid silicon onto the mold (once only).

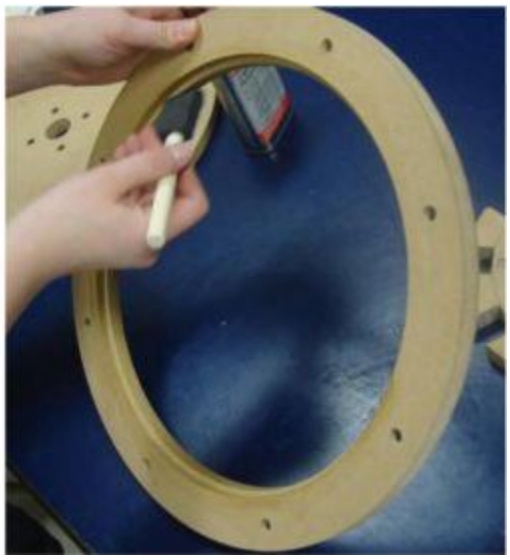

8. Prime surfaces

Make sure again that no loose metal objects are near the magnets.

1. Place the rotor into the mold.

2. In a separate cup pour some Devcon FL-10 primer

3. Apply with a fresh brush some Devcon Fl-10 on the steel rotor plate and the bushings.

4. Let it dry. After 15 minutes, apply a second layer.

5. Prop up the mold on one side so there is a slight tilt before pouring the.

6. Put the mold together. Place the bolt ring around the wooden base of the rotor. Next place the 4 pins into the 4 holes of the wooden base of the rotor. Beforehand coat them with a layer of mold release. Place the plug into the middle hole and apply a layer of mold release.

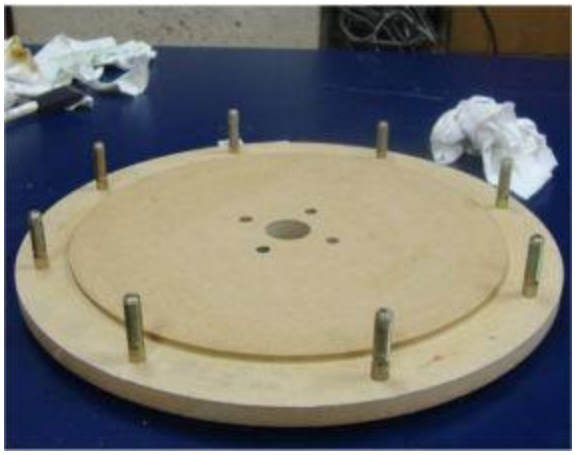

Place the second wooden ring on the first wooden ring and fix them using the nuts.

6. Cover the top of each magnet not to stain the magnets when pouring the material around them.

9. Mixing and pouring

1. In a different plate mix 2 bottles of Flexane and catalyst (as mentioned on the packages) for 2 minutes. You need 2 bottles for each rotor mold.

2. Take the mixed material to the wooden mold (that is already assembled). You will also need other brushes.

3. Apply a thin layer of Flexane on the mold - the metal and wooden part.

4. Pour the Flexane into the mold, and take extra care not to cover the magnets and leaving the top of the magnets slightly higher than the surface of the Flexane.

5. Level the Flexane.

6. You need a hot air gun to bring air bubbles out of the Flexane. Apply the hot air for 5 to 10 minutes.

7. Remove the mold after 10 hours.

8. You will need at least 16 hours before using the rotor plate.

10. STATOR

The stator is an epoxy resin casting with nine coils arranged inside. You can use as much coils as you want, provided that you use a multiple of three (because the three phase power is produced). The casting will have 6 bolts towards the outside area, similar to the end caps - same diameter, same holes. You may want to add 6 bushings to strengthen the casting on the whole device.

You also need to place small metal pieces in the center of each coil to help concentrate the flux through the center of each coil, which will improve the performance of the generator.

11. The molds for the epoxy resin casting

A. The mold base is made from the same material as the other mold - MDF. The outer bolt circle presented in the picture is needed to join the whole mold together and to fasten it together. The inner bolt circle (smaller holes) will hold the pins that will align the bushings. They will be removed after making the casting. The middle hole if for the center plug and it will serve for the flange.

B. This wooden circle needs to be placed in 2 layers (as presented later). It needs to go over the outer bolt holes on the base so they can be fastened together. You will need 2 such wooden circles.

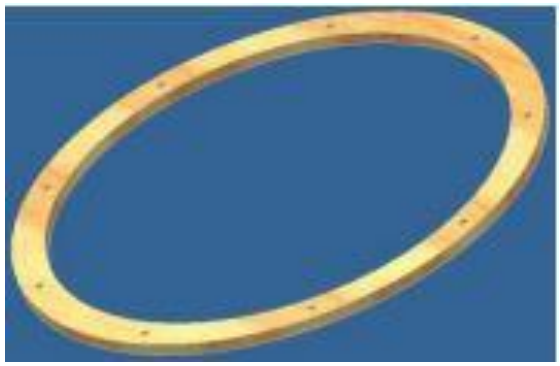

C. The central plug can be made out of any materials lying around. Take care at its dimensions because its diameter will increase after applying the mold release.

D. The outer pins can be made of any materials because they will be removed. However, the bushing must be made of steel because they will be part of the casting. You can also knurl these bushings for higher resistance into the casting.

12. Making the coils.

A. You can make the coils by winding them on a magnet jig which can be made by hand from scrap material.

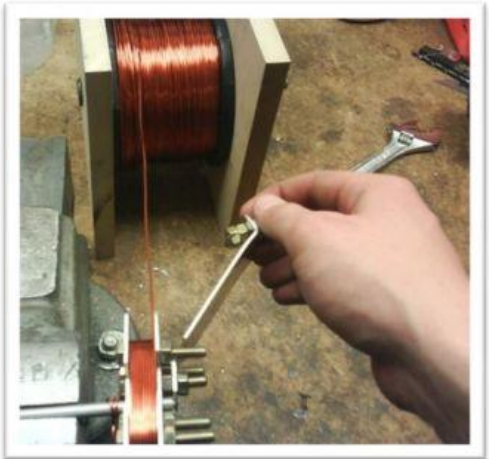

B. Each coil needs 100 turns of 16 AWG enameled magnet wire. The tighter, the better.

13. The resin casting

EPOXY TERMINOLOGY

A. Open time

Open time or wet lay-up time describes the working life of the epoxy mixture. It is the portion of the cure time, after thorough mixing, that the resin/hardener mixture will remain in a liquid state and be workable or suitable for application. The end of the open time (wet lay-up time) marks the last opportunity to apply clamping pressure to a lay-up or assembly and obtain a dependable bond.

B. Initial cure phase

The open time is over when the mixture passes into an initial or partial cure phase (sometimes called the green stage) and has reached a gel state. At this point the epoxy will no longer feel sticky, but you will still be able to dent it with your thumb nail. It will be hard enough to be shaped with files or planes, but too soft to dry sand. Because the mixture is only partially cured, a new application of epoxy will still chemically link with it, so the surface may still be bonded to or recoated without sanding.

C. Final cure phase

In the final cure phase, the epoxy mixture will have cured to a solid state and will allow dry sanding and shaping. You should not be able to dent it with your thumbnail. At this point the epoxy will have reached about 90% of its ultimate strength, so clamps can be removed. The epoxy will have to be left to strengthen at room temperature. A new application of epoxy will not chemically link to it, so the surface of the epoxy must be sanded before recoating to achieve a mechanical, secondary bond.

14. Mold assembly

Next, we will present the steps for fixing the mold together

A. Place the pins into the inner bolt circle until you have a plane surface on the bottom of the mold and place the bushings over them. This way, you ensure a fixed placement of the bushings.

B. Place the central plug to obtain the same plane surface on the bottom. Place the first wooden ring and fix it to the base of the mold using the bolts. Before placing the coils into the mold, pour a 1/8 inch thick layer of resin and let it harden.

C. After the resin hardens and remove the nuts from the bolts holding the stator mold together. Fix the coils on the hardened resin and place the wires as shown in the picture - around the small bolts.

D. Lastly, place the second wooden circle over the first circle. This will ensure a tight fixture. The second wooden circle goes over the wires. After the second wooden circle is tightly fixed with nuts, you can pour the rest of the resin into the mold.

15. Preparing the mold

Materials:

- West Systems Epoxy 105 resin
- Spray Adhesive
- West Systems 206 slow hardener
- Ruler
- West Systems pump set
- Utility Knife
- Polyethelene film, 2 mil
- Vaseline Mold
- release paste

A. Before assembling the mold, apply mold release paste onto the parts of the mold that the resin will reach. Repeat 2 times, after 10 minutes of soaking.

B. Clean bushings with a solvent.

C. Draw the patterns of the coils on the Polyethelene film. Apply on the other side adhesive spray then spread the film on the base of the mold. Remove any wrinkles that might have remained.

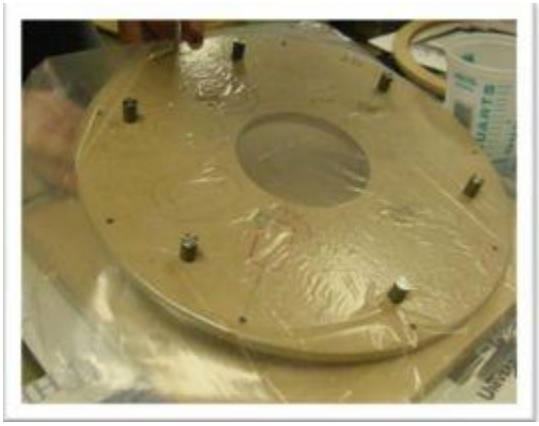

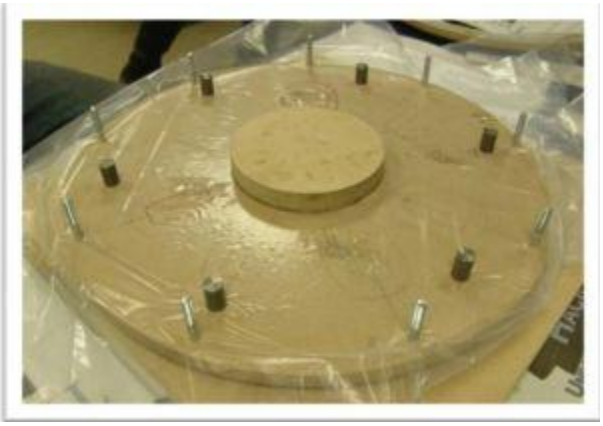

D. To prevent any leaks, pour mold release in excess on the bottom of the mold, where the outer pins are placed. Remove the extra mold release after placing and fixing the first outer wooden circles.

E. Grease the inside of the bushings with vaseline and place them together with the pins.

F. Place the center plug into the central hole after coating it with mold release paste.

G. Place all coils into the mold, as shown in picture and place the second wooden circle on the loose wires. The center plug must be at the same level as the second wooden circle. Now look carefully if the coils are placed 1/8" below the level of the mold. Remove the coils after removing the second wooden circle.

Pouring epoxy – dry time test

H. You need to pour this stator in 2 layers. The first layer must set up to tack-free before you pour the next level. This is to create a chemical bond between the 2 layers and to ensure that the coils will not sink.

I. Following the step by step instructions, mix up a test batch to calculate the time it takes to dry. The next step is to pour a 1/8" layer of epoxy and measure the time it takes to dry. The epoxy will start from the consistency of syrup, then form peaks, then finally hold its shape with the consistency of jello. By this time the epoxy you have already poured will become tack free and you can pour the second layer. Time will vary with temperature, humidity and time of mixing.

Pouring epoxy – first layer

J. Asses the volume and prepare the quantity. If not sure, add 10% to cover the errors.

K. Using the West Systems epoxy system, take one pump from resin, then one pump from hardener. 1 pump resin + 1 pump hardener = 0.8 fl oz = 1.44 in^2 . After 3 minutes of mixing, scrape the sides. Transfer the mix to another container, then mix for 1 minute. By transferring the mix to

another container alleviates the problem of unmixed resin in corners is avoided.

L. Next pour into the mold and let it sit for the test dry time to set up to tack free. Note that in the next picture, the resin is hard to see since it is clear.

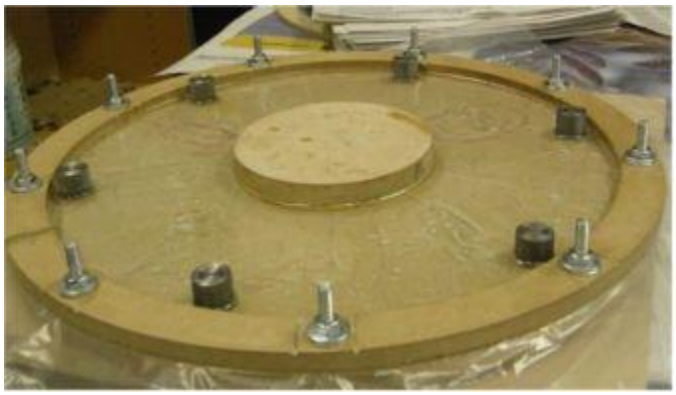

Pouring epoxy – second layer

M. Place the coils into the mold. Apply excess release paste to the outer edge of the second wooden circle. Make sure not to pour excess paste on the inside of the wall of the mold. Fix the second wooden circle and clean the excess release paste.

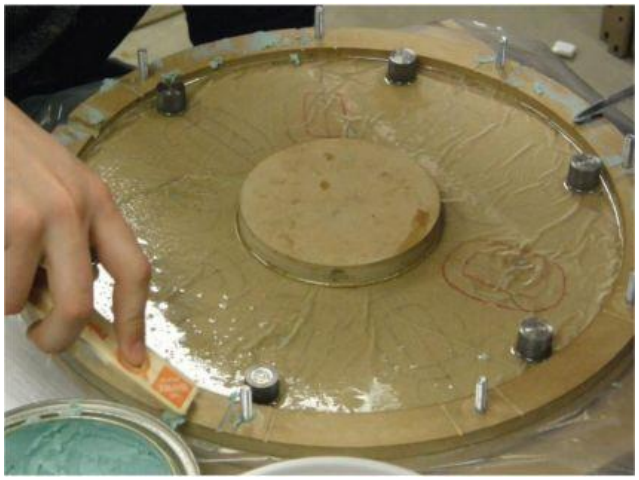

N. Check the quantity of vaseline on the tops of the pins and bushings that are not in the cast. Add more to cover if necessary to seal these areas against epoxy spillover.

O. By mixing as shown above pour epoxy into the mold until the level reaches just below the top of the mold (the second wooden circle)

P. Place a flat board that has been prepared with mold release on top of the mold, letting it rest on the centre plug and the second wooden circle. Weight the board with anything available. This layer of epoxy will set up very quickly because it is thicker and it will level the surface of the mold. The board can be removed in roughly three hours.

Demolding

Q. You can demold in 24 - 48 hours, but to be sure, let the mold dry 4/5 days.

Demold in 24 - 48 hours, but let fully cure for four to five days.

R. You can polish the top side (the bottom one will be smooth because of the film) with emery until a smooth level is reached.

Note: You may obtain a slightly thicker or thinner stator. You can either adjust the thickness of the rotor flange, or the thickness of the rotor plates.

16. Stator wiring

Three-phase alternators can be wired in two configurations: Y-configuration or delta. We chose to wire our generator in delta in order to produce higher voltages and attempt to keep the current in the phases down. This means that each phase is wired in series:

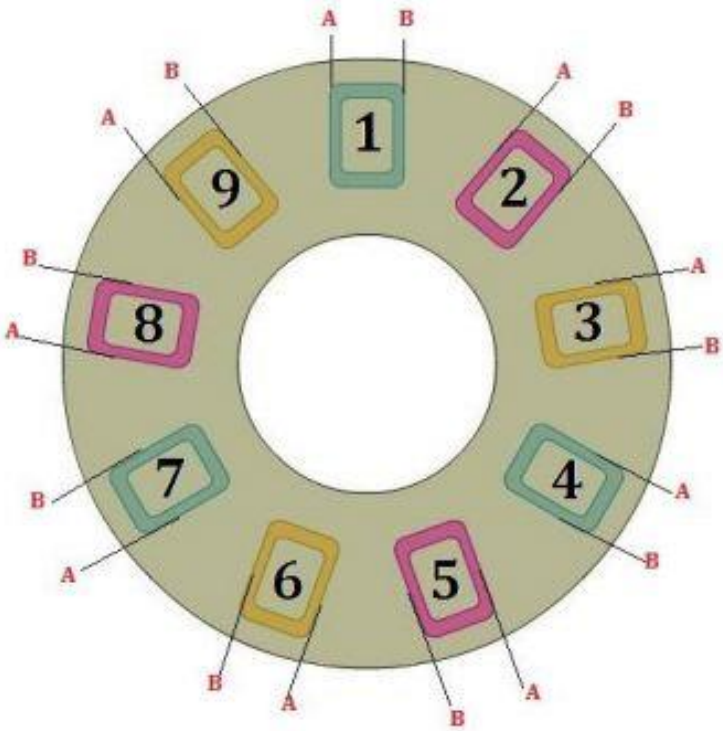

Phase 1			
Red Lead to 1A	1B to 4A	4B to 7A	7B to Ground
Phase 2			
Blue Lead to 2A	2B to 5A	5B to 8A	8B to Ground
Phase 3			
Green Lead to 3A	3B to 6A	6B to 9A	9B to Ground

The first column of the table (1A, 2A, 3A) should just have lengths of wire soldered onto them. Each phase is colored differently in order to distinguish them easily later. The next two columns show which leads to connect with pieces of wire, for example 1B should be soldered to 4A and then 4B should be soldered to 7A. The last column shows which leads to

solder ground wires to (7B, 8B, 9B). This arrangement wires each phase in series and brings the power out of each phase individually.

The three phases can be utilized in many ways but based on our production we are going to rectify the signal.

17. Air gap optimization

The air gap represents the space between the front of a rotor and the front of the stator, on each side. If the casting is properly done, you have very little space to adjust. The magnetic potential will highly depend on this space as it is fairly easy to fall off across the air and the performance of the generator will vary.

When assembling the generator, you can easily optimize the gaps. Once you establish the final position of the stator, you can cut tension spacers and in the end replace the all-thread with high strength bolts. If the gap is too small, take extra care to ensure that the rotors are not hitting the stator in any point.

18. Rotor mount (flange)

The flange will be attached to the rotor plates. You need to mount them face to face. The flange also needs to have the same 4 holes drilled to align with the rotors. The tube must have the same diameter as the central hole of the rotors.

The rotor mount is built from aluminum because it is resistant to corrosion and it is light. Alternatively, it can be built from a different material.

A piece of appropriately sized steel or aluminum tubing can have a steel or aluminum ring welded to it. If this is done, one must be careful to weld evenly so that rotating balanced is maintained. The thickness of the rotor mount should match the thickness of the stator. So you need to build it after the stator is cast to determine its proper size.

To attach the flange to the shaft, two bolts can be used. Have them placed at 90 degrees to one another for a better grip.

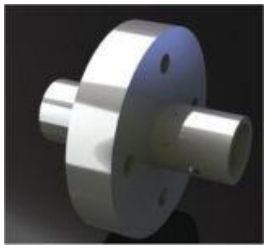

19. The driveshaft

The driveshaft is the metal bar that holds the flange and bearings. This element will spin at a high rate so take extra care when choosing the materials. We suggest stainless steel because of its resistance. At the end of the driveshaft (the one towards the collar) place a handle. Further explanations will be presented. You can manufacture any type of handle as long as it gives you leverage to make the driveshaft spin.

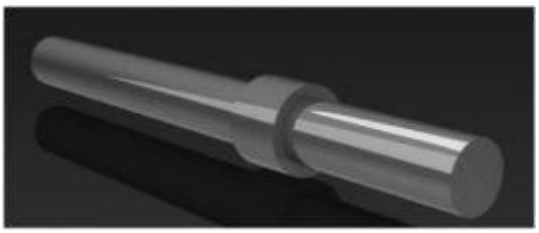

You can also use carbon steel if available because it is also resistant. Regardless of the material you will use, Permatex Anti-Seize (or similar) and caution should be exercised when assembled to prevent galling and corrosion.

You need to drill holes for the support of the flange to properly assemble and securely lock them together.

20. Bearing selection

The bearings you need to use are simple flange bearings that you may have lying in your garage. We opted to use a collar onto the driveshaft that is fixed to the back of the bearing. The bearing's role is also to set the distance between the bearings.

21. Casing

The whole generator will have a casing to protect its elements. This casing is crucial when using the generator in extreme conditions, such as snow, rain, etc. The case can help protect against everything from ice buildup to organics buildup to animal strikes. If implemented properly, it may be able to extend the life of the generator and help prevent corrosion of the assembly and wear on the bearings.

22. Implementation of the case

The case is shown here sitting with one of the end caps (before the end cap had been drilled). It is made from thin aluminum sheet and attached at the top and bottom to two aluminum boxes. They were folded out of remaining aluminum sheet and riveted together. The box which you can see inside of in the photo is actually the bottom box. It has Dzus connectors which provide quarter-turn access. Also, the fasteners stay in the material so there is no way to lose them when you open the case. The case attaches to each side of the top box via hinges. This allows each side of the case to be opened separately. The boxes will be bolted to the inside face of each end cap. Antichafe tape will be used on all edges that come in contact with the

generator to facilitate a strong seal and prevent vibration noise and wear. To get the rounded shape of the aluminum shown here, use a roller setup or carefully hand roll it yourself around a mandrel of similar size.

Tension spacers

The tension spacers are the tubes wrapped around the mounting bolts. They set the distance between the stator and the rotors. They should be placed as close as possible, but be careful for the rotor and the stator not to touch. A strong but nonferrous material (brass/bronze/aluminum) should be used. This is the moment for the air gap adjustment.

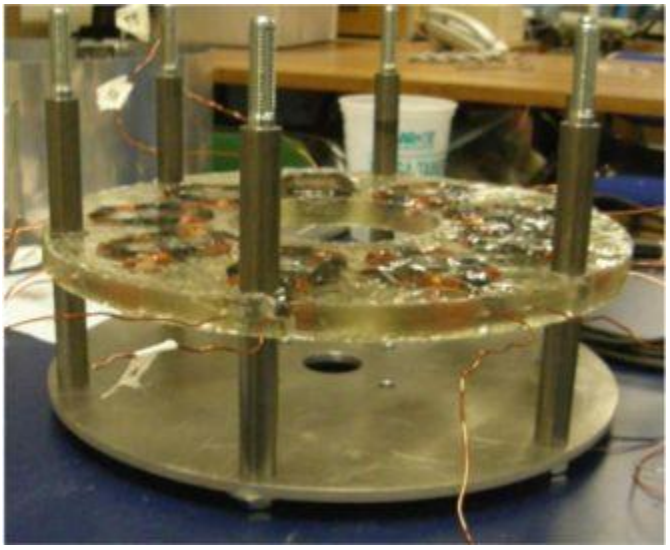

Generator assembly

Next we will present the assembly of the generator:

1. Fix the bearing to the end cap and slide them together through the driveshaft until it fixes onto the collar. Tightly screw the system together.

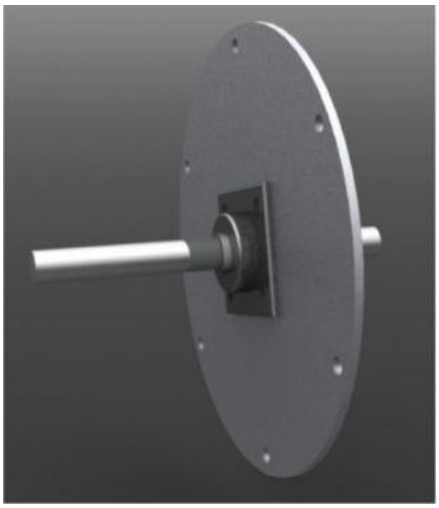

2. Next slide the first rotor plate (on the backside) then the flange and fix them together using the 4 bolt pattern. Consider using anti-seize or similar to prevent galling. Insert the locking pin into the flange to fix it to the driveshaft.

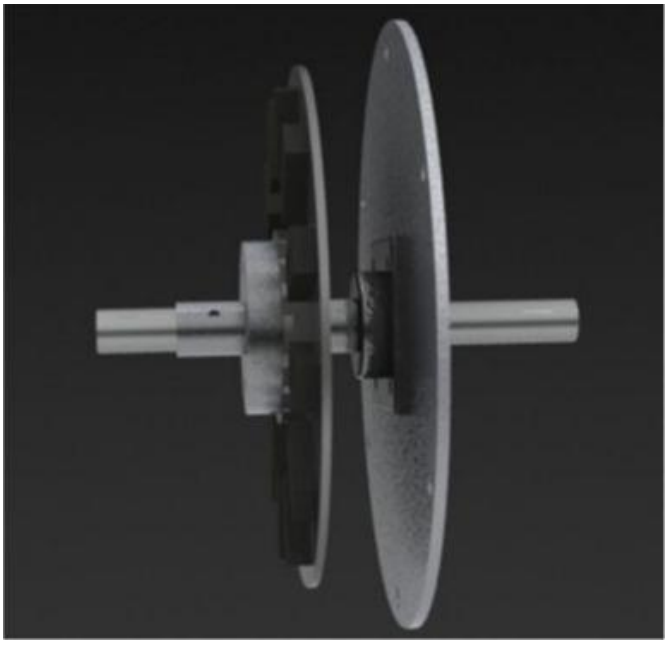

3. Place the stator onto the first rotor plate. Make sure that the rotor does not come in contact with the stator. If still not suitable, readjust the distance of the tension spacers.

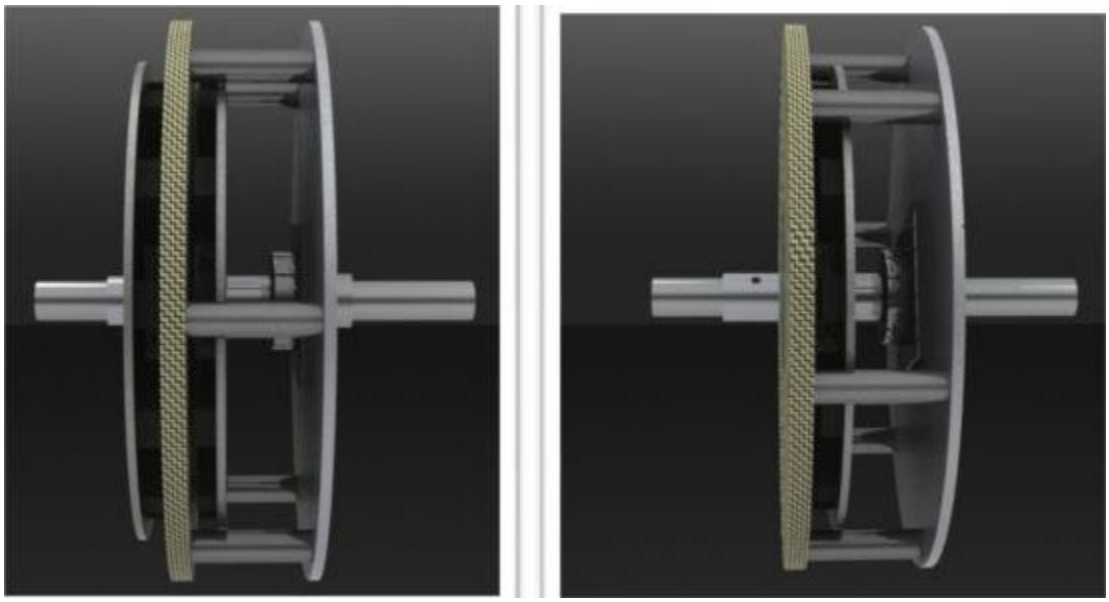

4. Next, place the second rotor plate facing the stator. Make sure the position of this stator plate is accurate because it is crucial for the magnets to attract to one another. Be very careful at this step because injury may occur. It is recommended to find a system of lowering the second plate into place, such as using wedges or small jacks. We used pieces of wood stuck in at 90 degrees and set the plate on. Then we inserted thinner pieces of wood next to them and pulled the larger ones out, thus slowly lowering the rotor. This was repeated until the rotor was in place.

5. Place the rest of the tension spacers and fix the back bearing. Fix it in place with the set screws, similar to the first bearing.

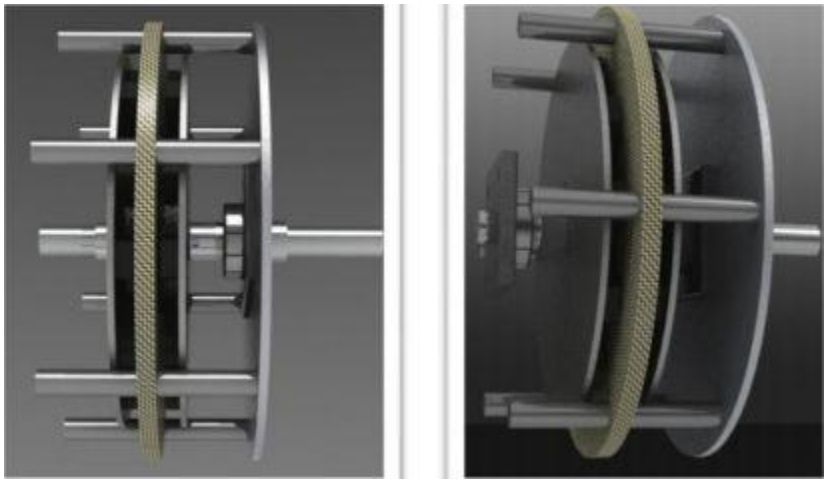

6. Place the second end cap and fix it to the bearing using the bolts.

7. Place the cast over the generator.

You now have the complete generator.

Electrical Parts

The next section will describe how to connect the rectifier to the stator. We recommend using two 'single phase bridge rectifiers'. They come in blocks 30 x 30 mm. The positive terminals are both connected to the positive terminal. (They are often at right angles to the other three.) Both negative terminals are connect to the battery negative. The remaining four terminals are for AC connection to the stator. You will probably only need to use three of these, connected as desired to suit the speed.

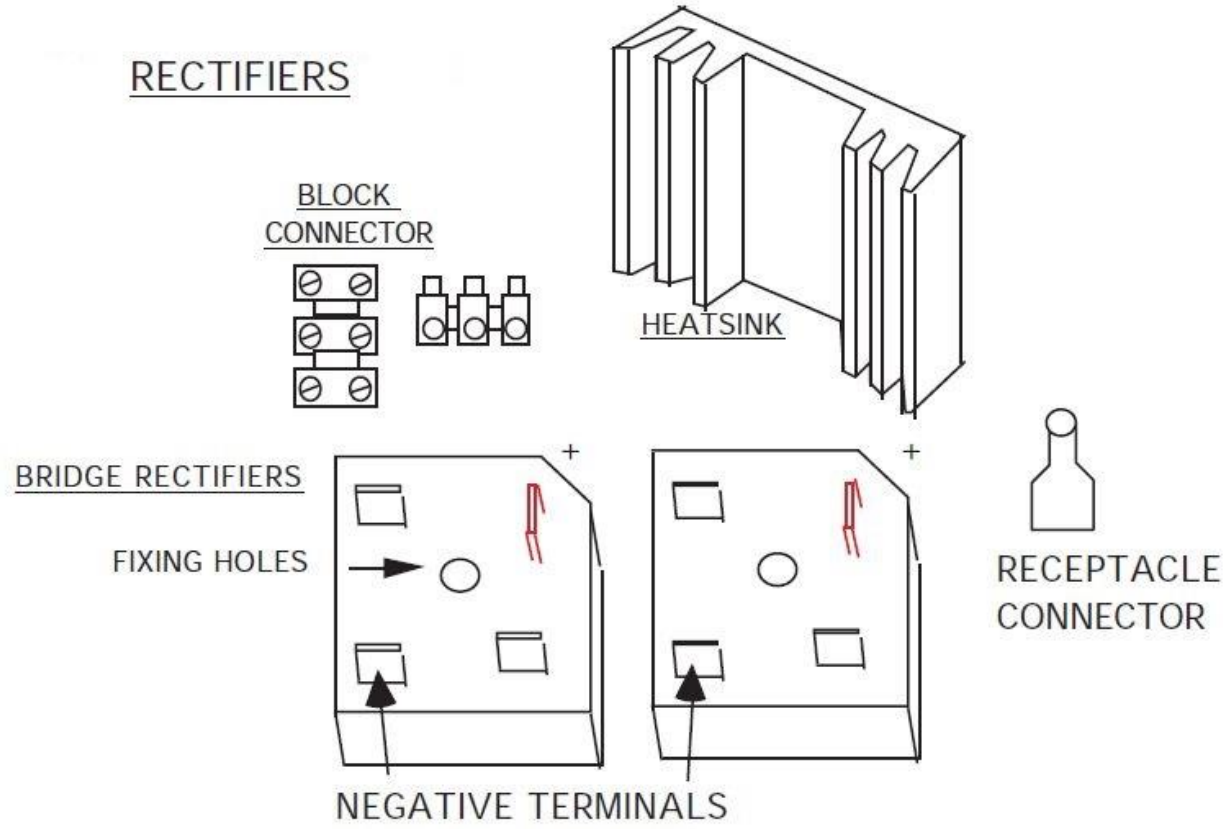

'Block connectors' are useful for connecting the wires from the stator. Alternatively

soldering or crimping would be fine.

Use solder, or crimped 'receptacle' connectors, to connect wires to the rectifiers.

Take care not to overheat the rectifiers while soldering. Bolt the rectifiers onto the

heat sink, which will probably look like the one in the diagram, but can be any piece of

aluminium approximately 250 grams or more in weight.

Keep all the connections under a weatherproof cover.

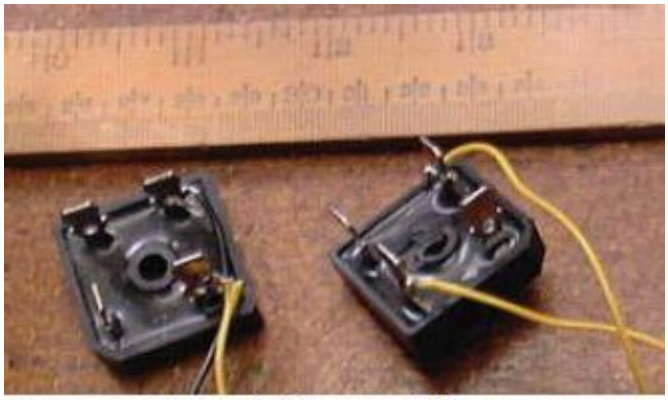

Two bridge rectifiers

Electrical testing:

Coil connection test

It would be helpful to have a multimeter when testing the Magnet Generator, but it is possible to do some basic test with a 3 volt torch bulb.

- Connect the wires 1B to 4A, 2B to 5A and 3B to 6A (series connection of pairs of coils which are in the same phase)
- Set the multimeter to 10 VAC or similar (if you have one)
- Connect the meter, or the bulb, between the wires marked 1A and 4B

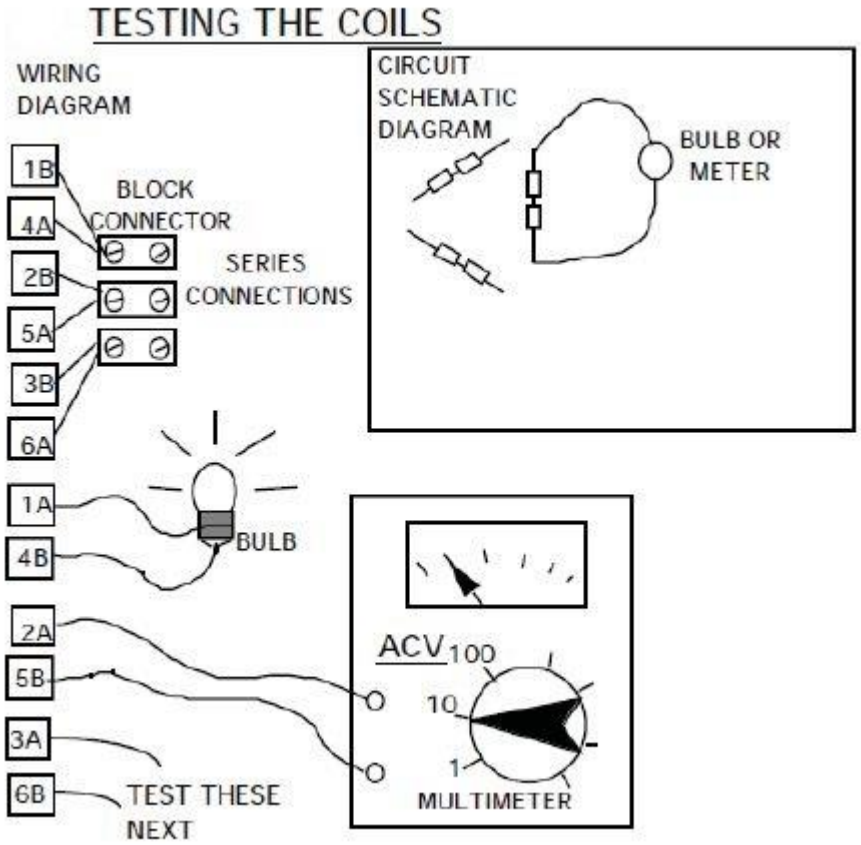

- Rotate the Magnet generator slowly by hand, about one revolution per second
- The meter should be giving a reading of about 2 volts, or the bulb should flicker
- Repeat the test with 2 more pairs of wires: 2A and 5B, 3A and 6B - In each case the result should be the same

If there is no reading, or a very low reading, then check that the series connections (1B-4A, 2B-5A, 3B-6A) are correct. If all these connections are good, then it is possible that one coil has been reversed (placed upside-down).

If any coils have been reversed, then it is necessary to do another test (see diagram 45), to find out which one is at fault. Connect 4B-2A and 5B-3A as shown in the diagram.

Now test between 1A and 6B. There should NOT be more than a very small voltage. If there is a voltage, or the bulb lights up, then reverse the

connections (swap A for B) on the coils until the voltage drops to a very low level.

When the faulty coil has been found, label the tails again, with A and B at the correct ends.

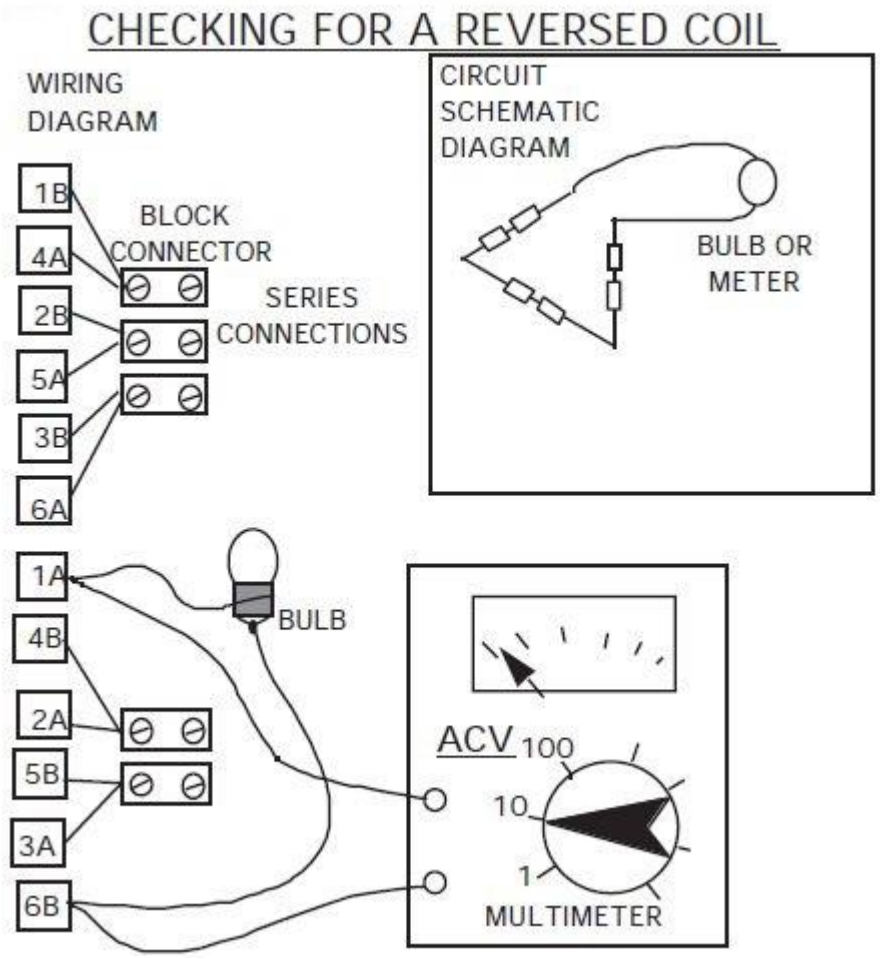

There will always be a small voltage in this test, because the coils are not perfectly positioned in the mould. If the test gives more than one volt, then it should be possible in future to make a better stator by placing the coils at exactly equal distances apart in the mould.

DC output test

When these tests have been completed and the results are correct, then connect the rectifier, as shown in diagram 46. Connect the tails 1A, 2A and 3A together. Connect each of 4B, 5B and 6B to any three of the rectifier AC terminals (marked with 'S' symbol). This is the 'star' connection. Connect a bulb to the output. If possible, also a multimeter on 10 VDC (or similar).

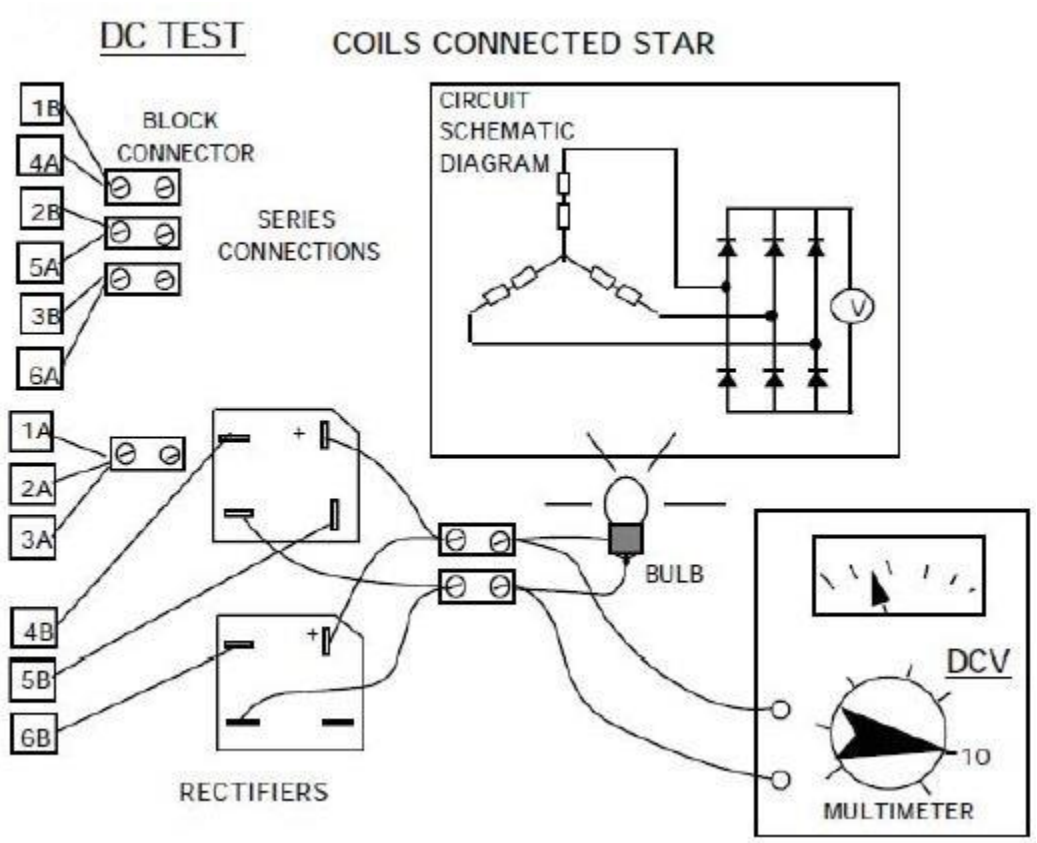

Rotate the rotor by hand as before, approximately one revolution per second (60 pm). The meter should have a steady reading around 4 volts DC (3 volts with the light present). The bulb should glow with a steady light, not flickering as before.

If there is no reading, or the bulb flickers, then there is a faulty connection or a faulty rectifier. Check the connections carefully. Try another rectifier.

You can also test the Magnet Generator without a bulb or a meter. Simply connect the positive and negative wires from the rectifiers together (all four) in a 'short circuit'. Now try to turn the Magnet Generator. It should be stiff but smooth to turn. If it trembles as you turn it then there is a fault.

Connecting the Magnet Generator to the output:

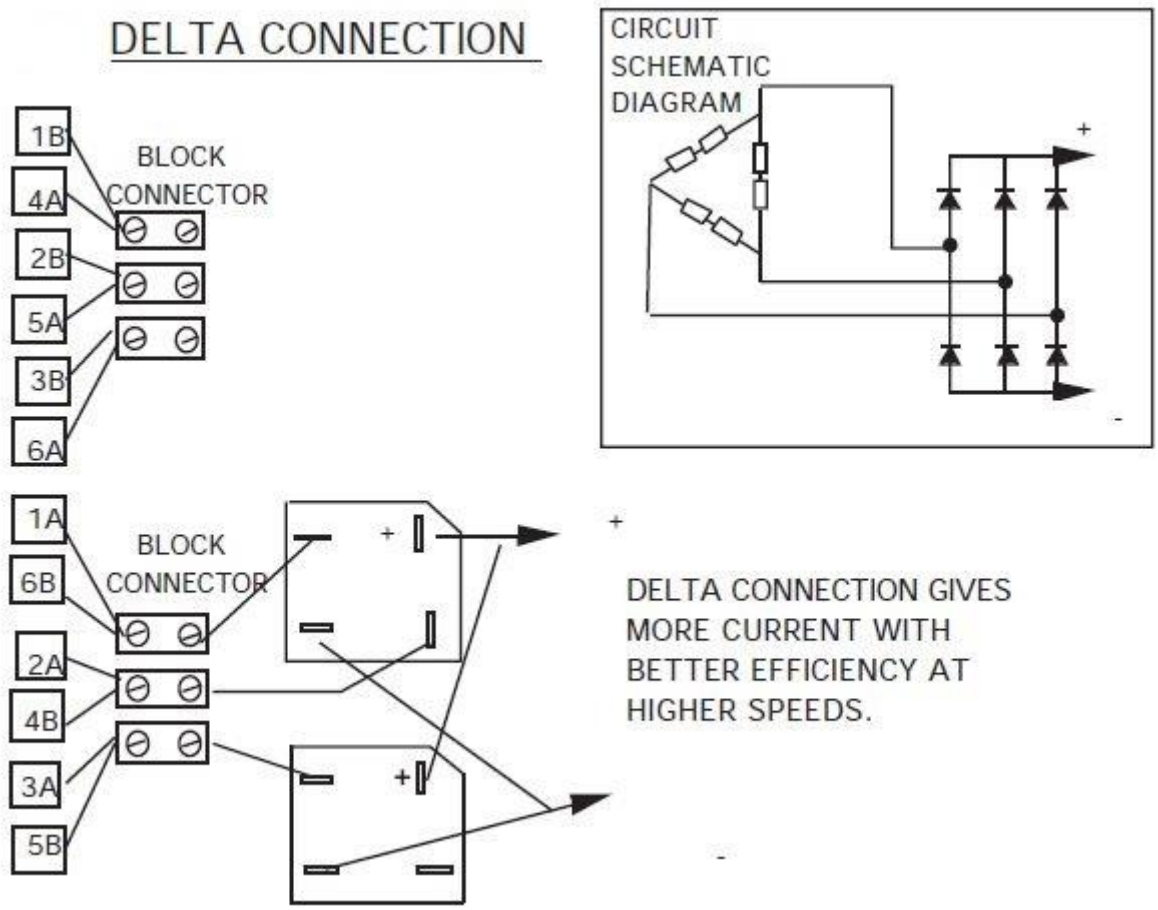

It is also possible to wire a relay which will switch the connections from star to delta and back as desired.

USING A RELAY TO CHANGE BETWEEN STAR AND DELTA

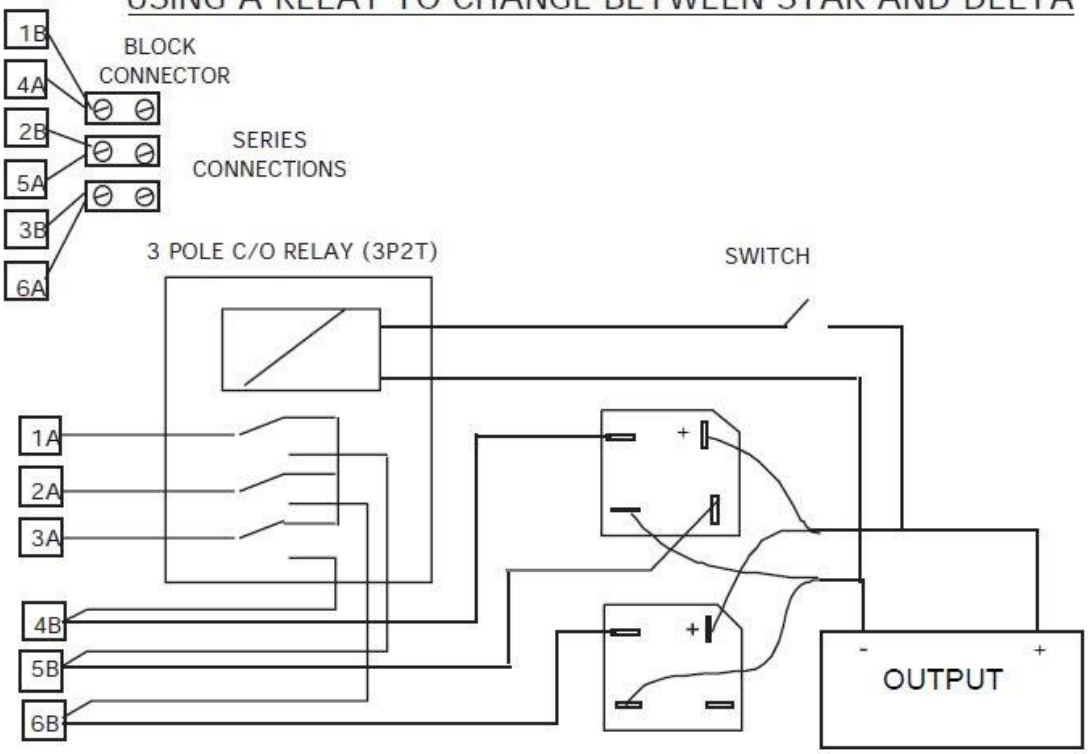

STAR/DELTA CONNECTION

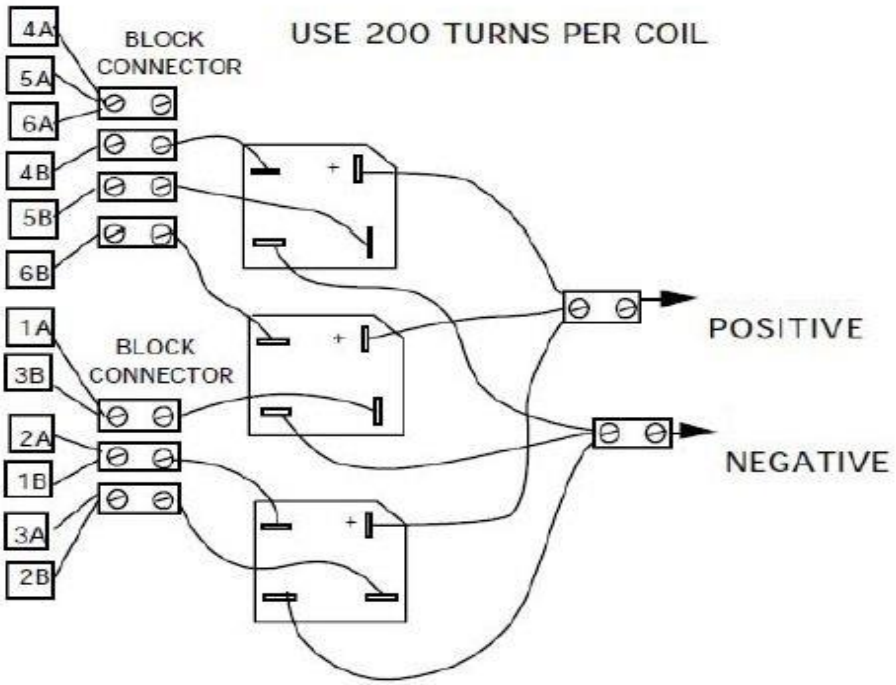

Next we will present each part and its dimensions:

End cap:

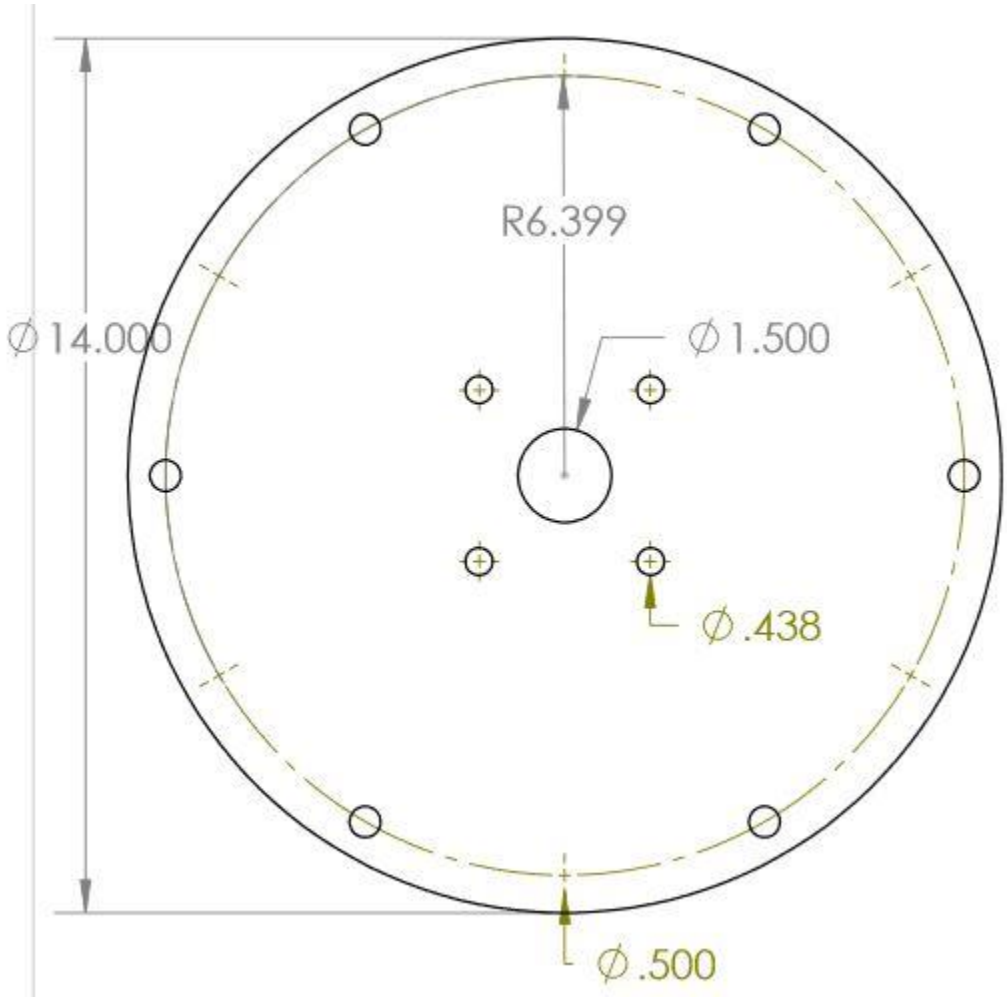

Flange:

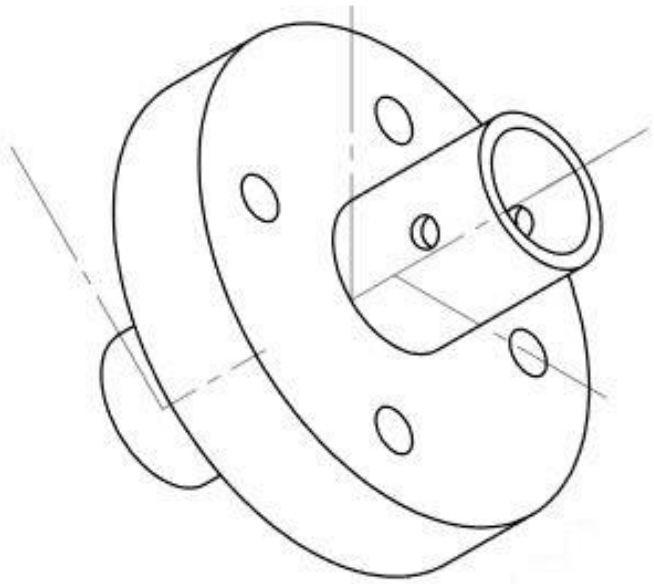

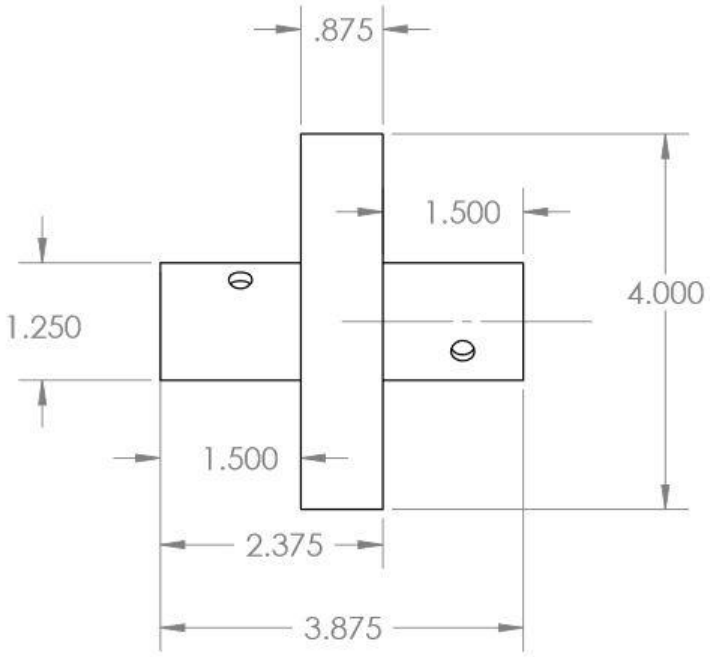

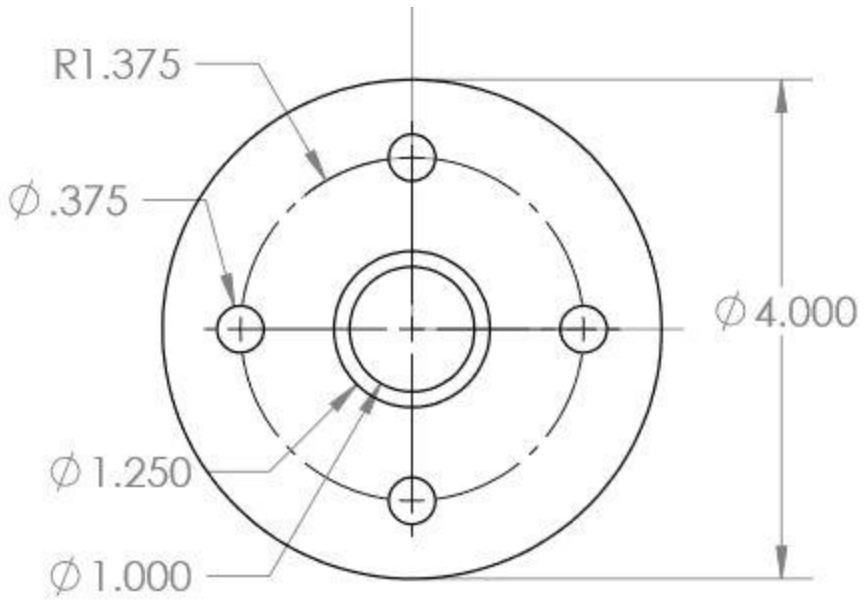
R1.375
∅.375
∅4.000
∅1.250
∅1.000

Drive shaft:

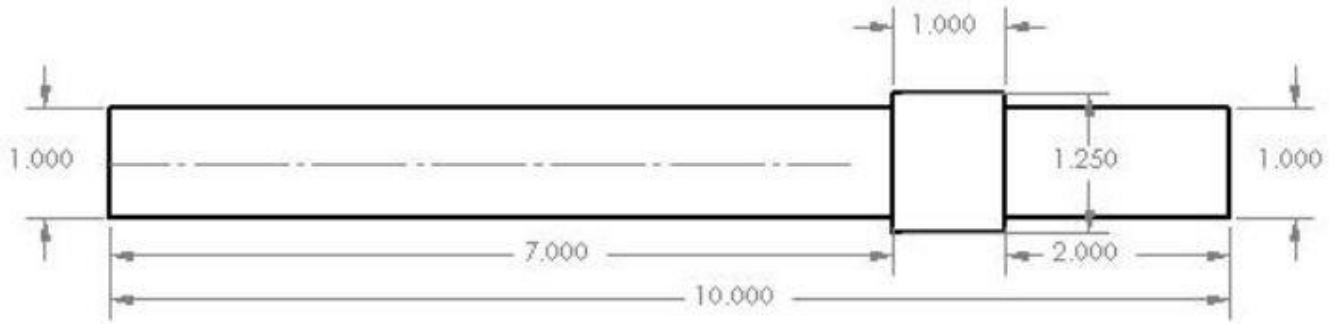
1.000
1.000
1.250
1.000
7.000
2.000
10.000

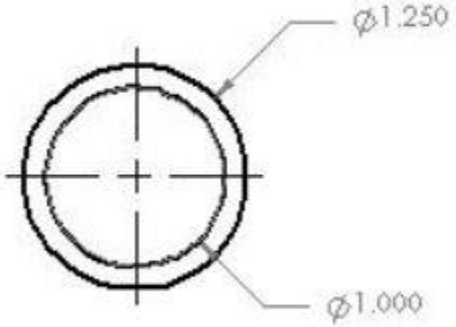
∅1.250
∅1.000

Wooden jig for magnets:

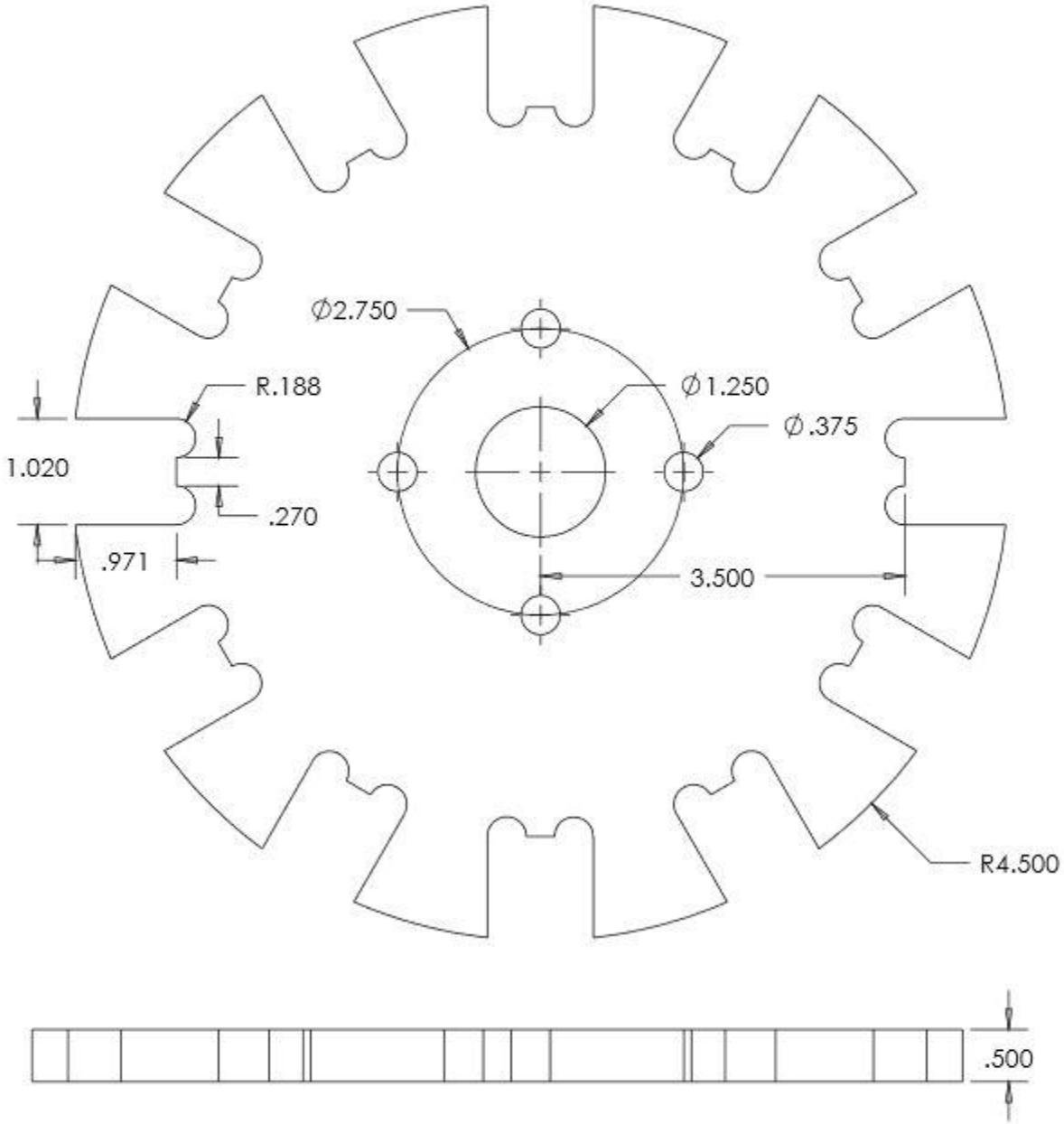

Rotor plate:

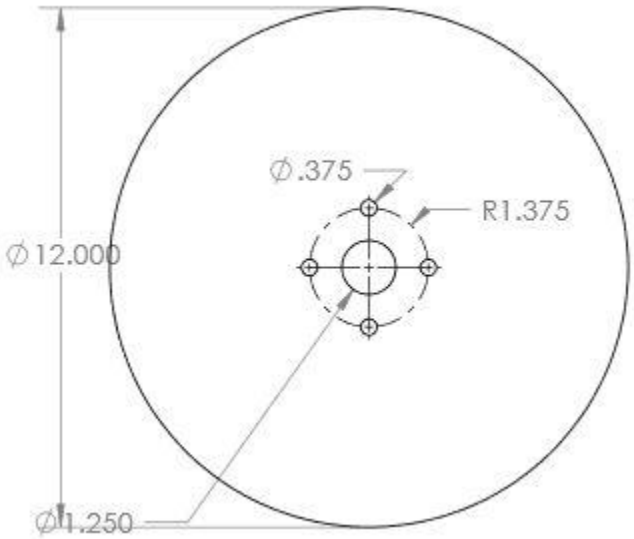

Rotor bushing:

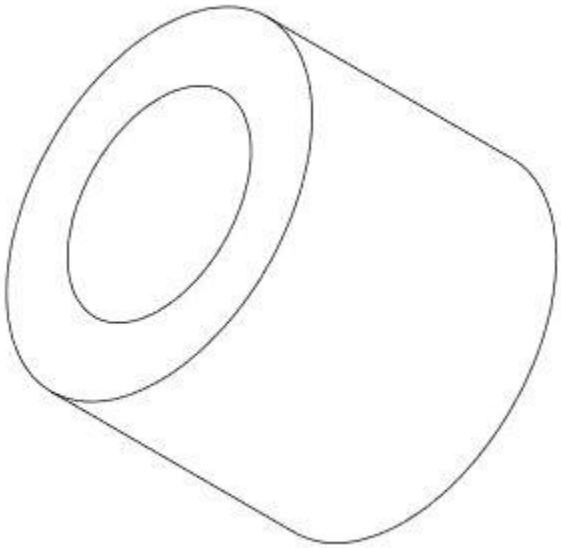

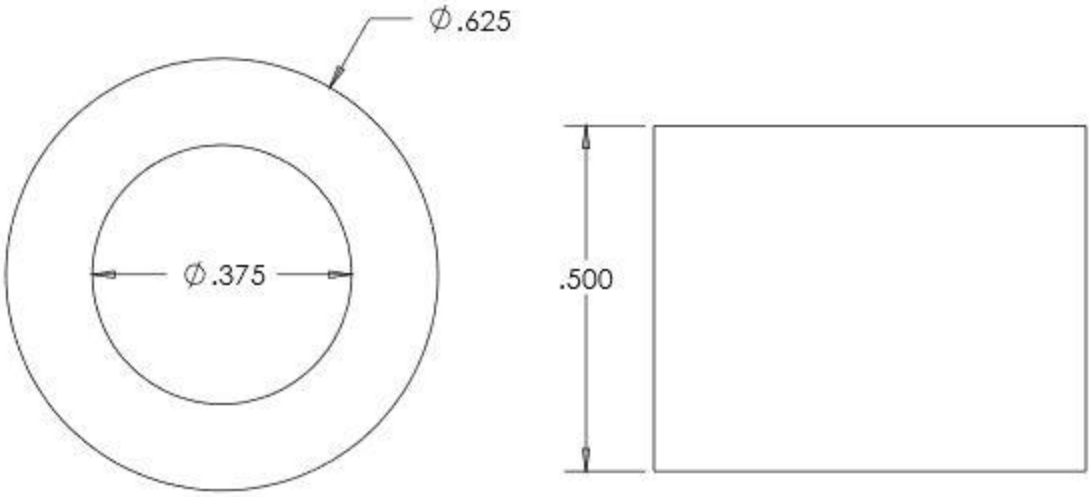

Rotor center plug:

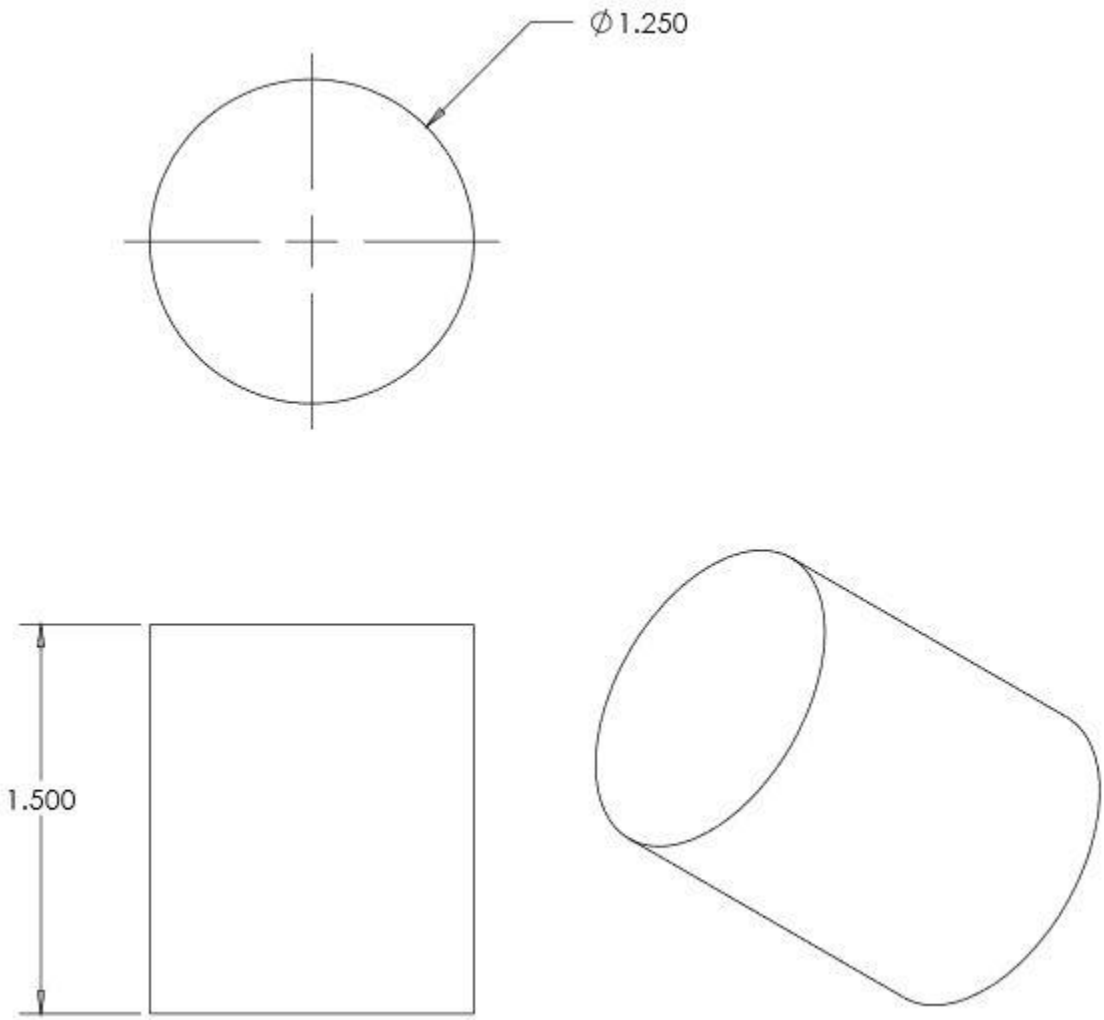

Rotor mold base:

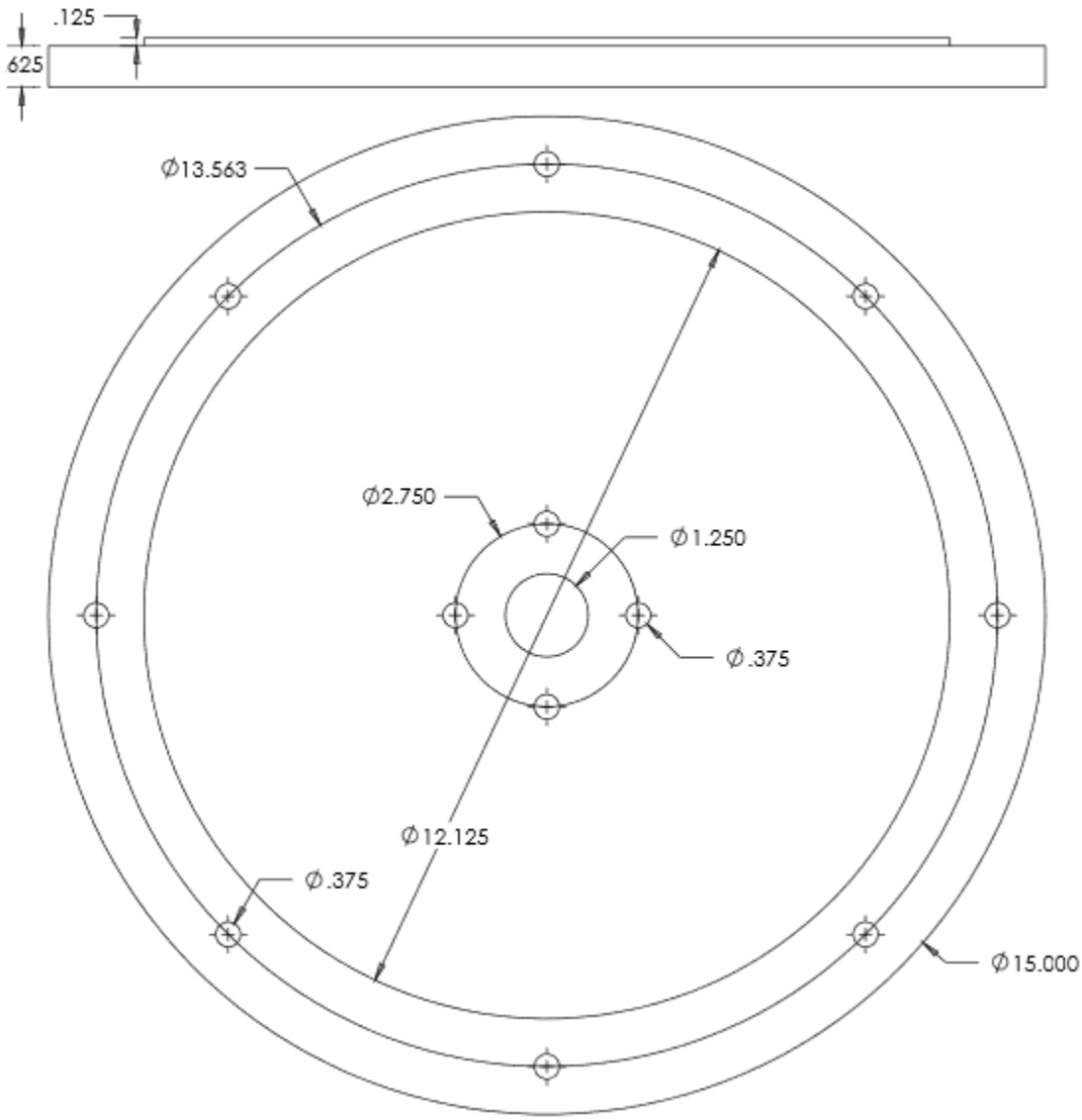

Rotor mold top:

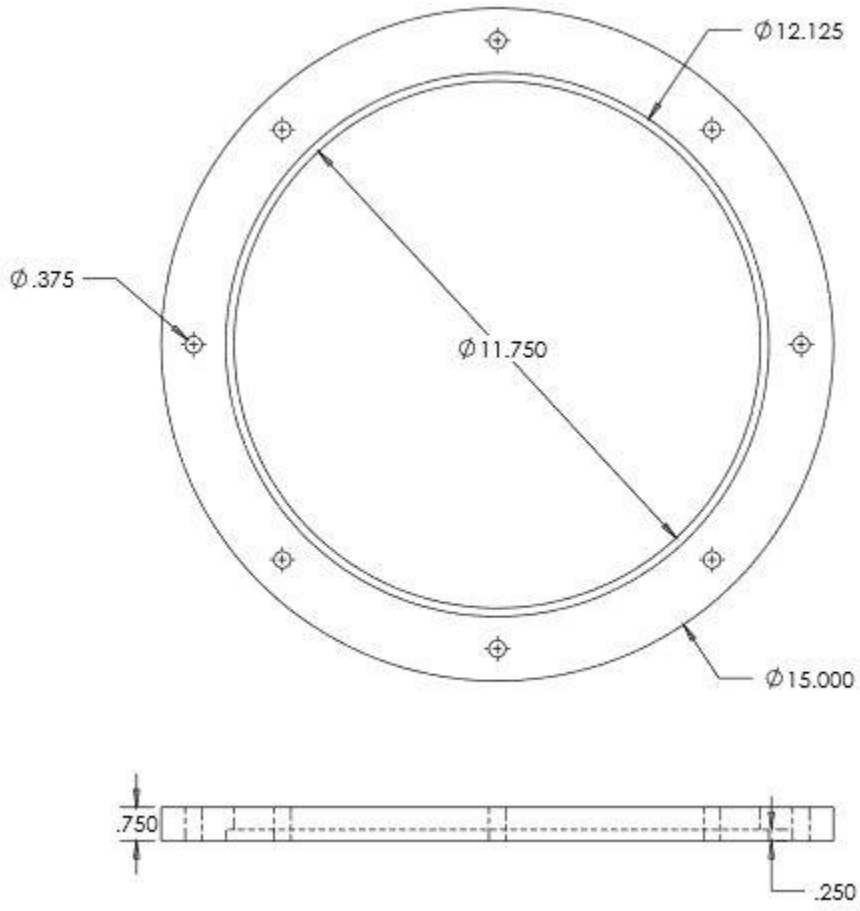

Rotor pin:

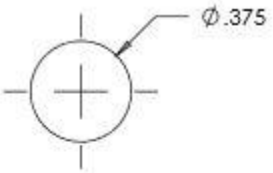

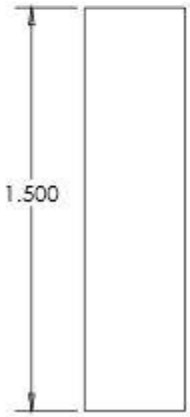

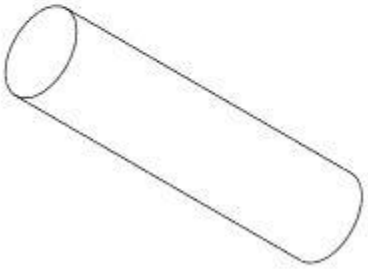

Stator base:

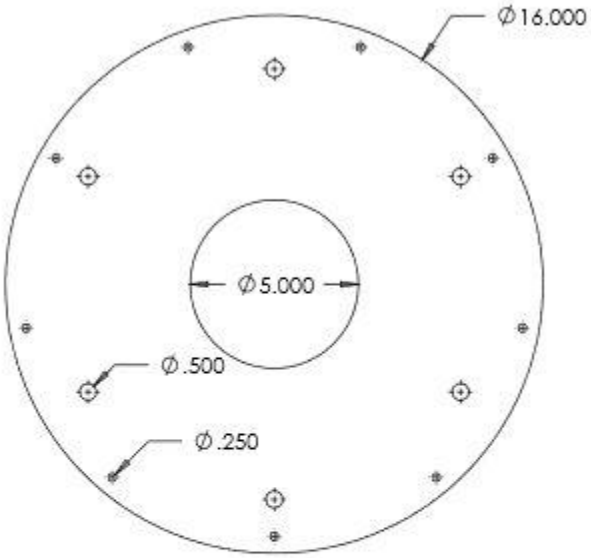

Stator top halves:

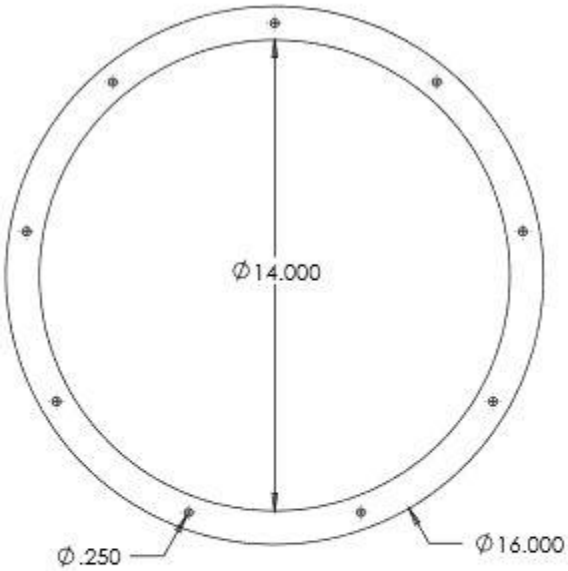

Stator bushing:

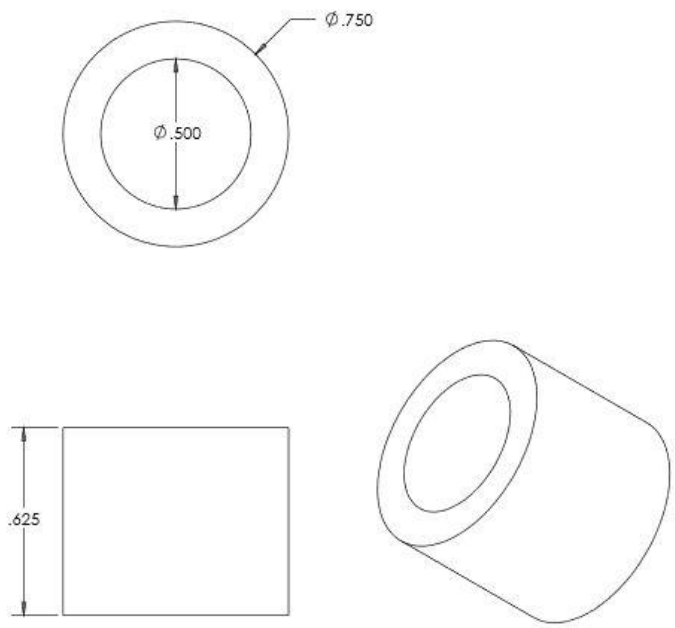

Stator spacer:

Stator pin:

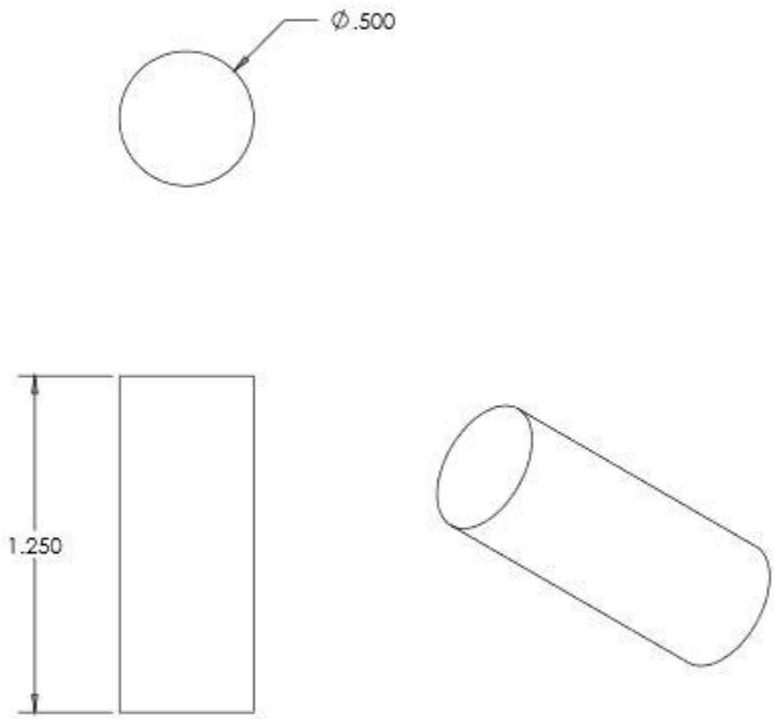

Stator plug:

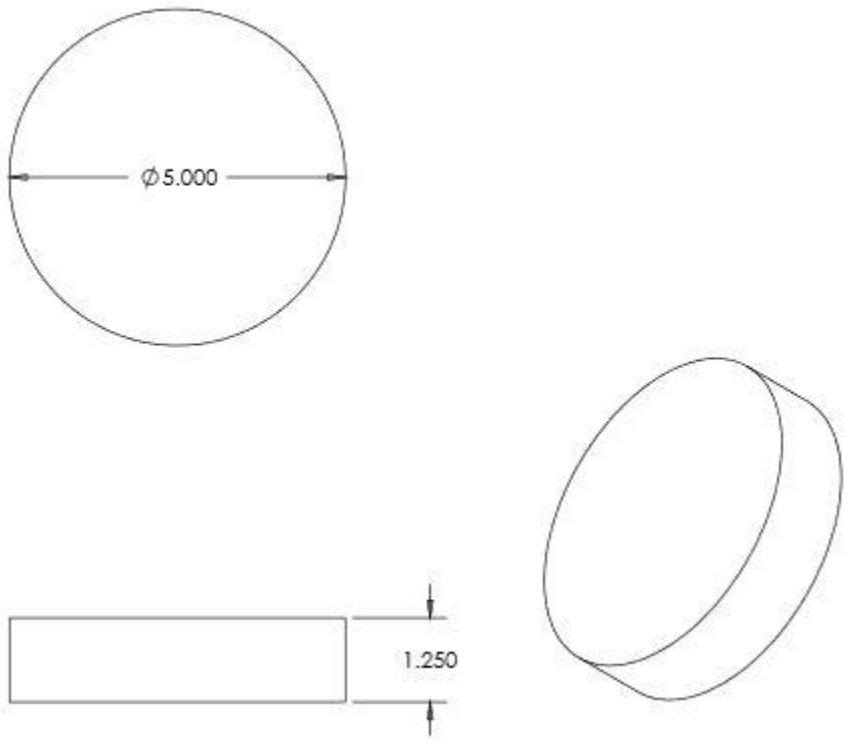

Bracket mount cap:

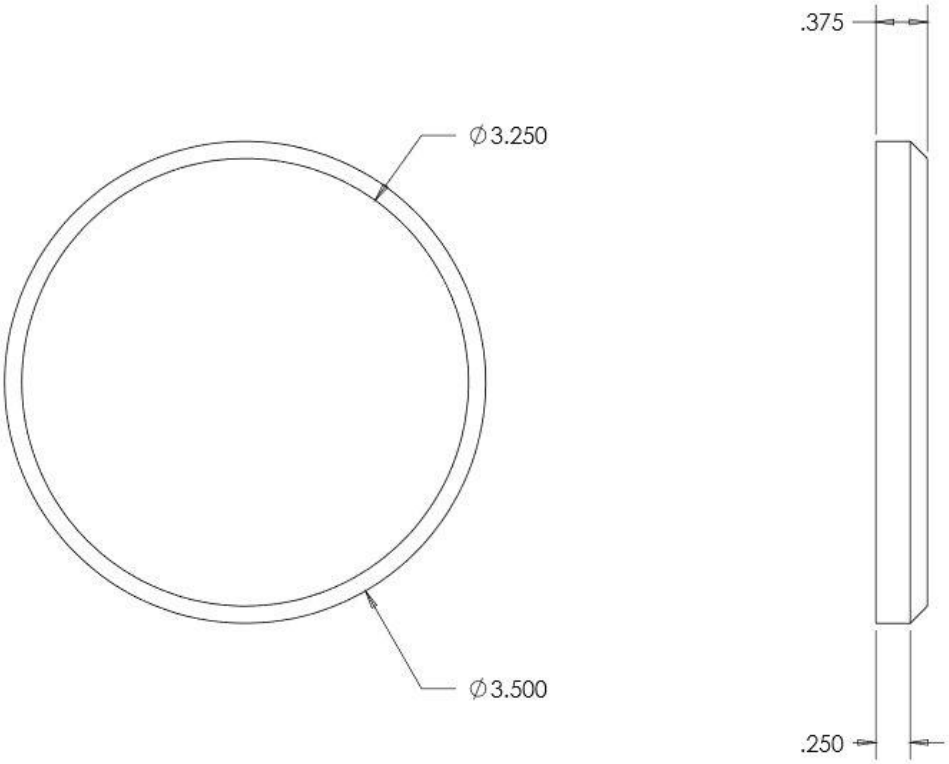

Bracket mount: